MW24C 21/2 Cubic Yard Wheeled Loader
Hydraulic Lift Cylinders and Mounting Bushings
Lift cylinder bushing part number correction

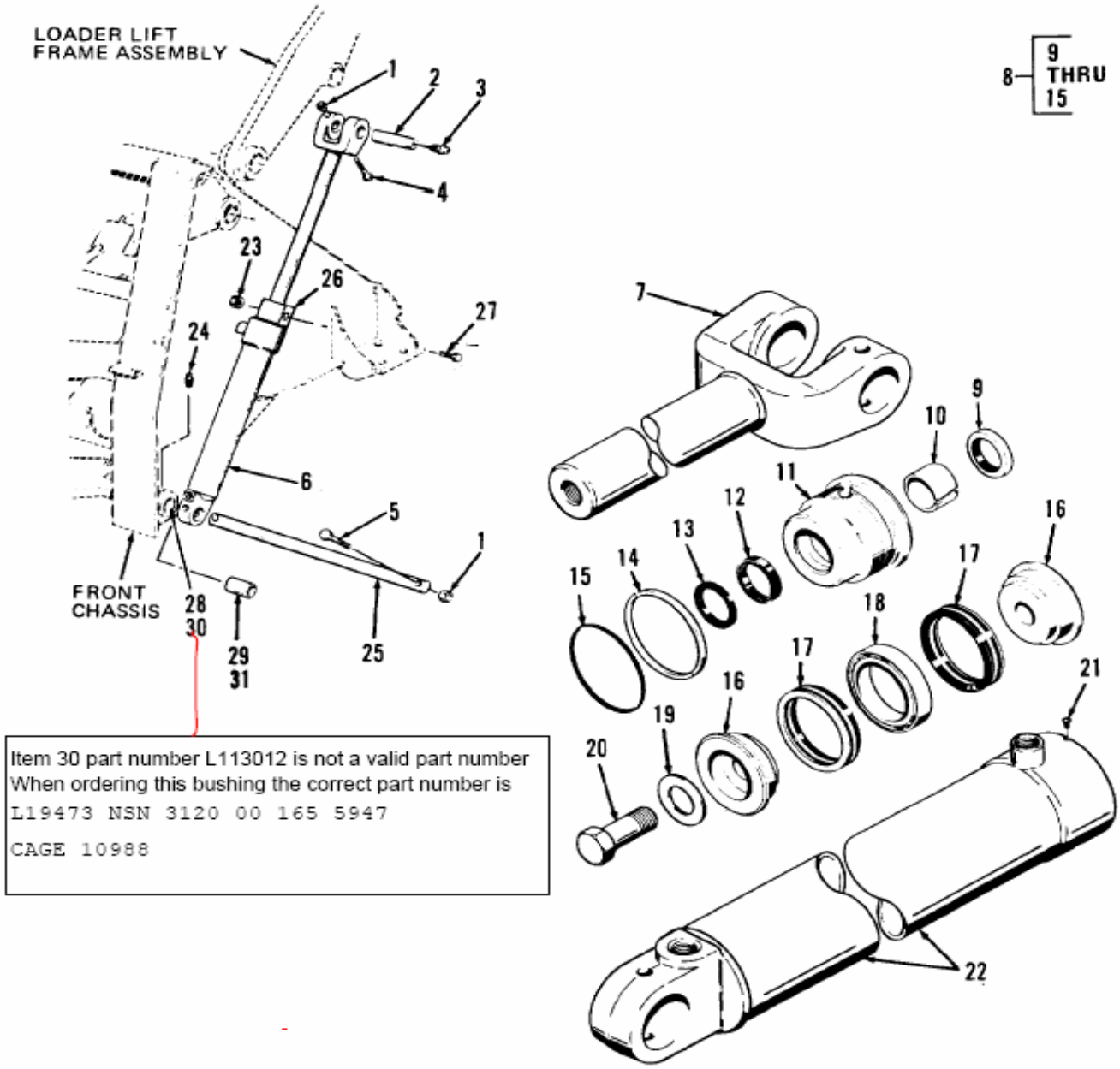

Item 30 part number L113012 is not a valid part number
When ordering this bushing the correct part number is
L19473 NSN 3120 00 165 5947
CAGE 10988

Figure 145. Hydraulic lift cylinders and mounting.