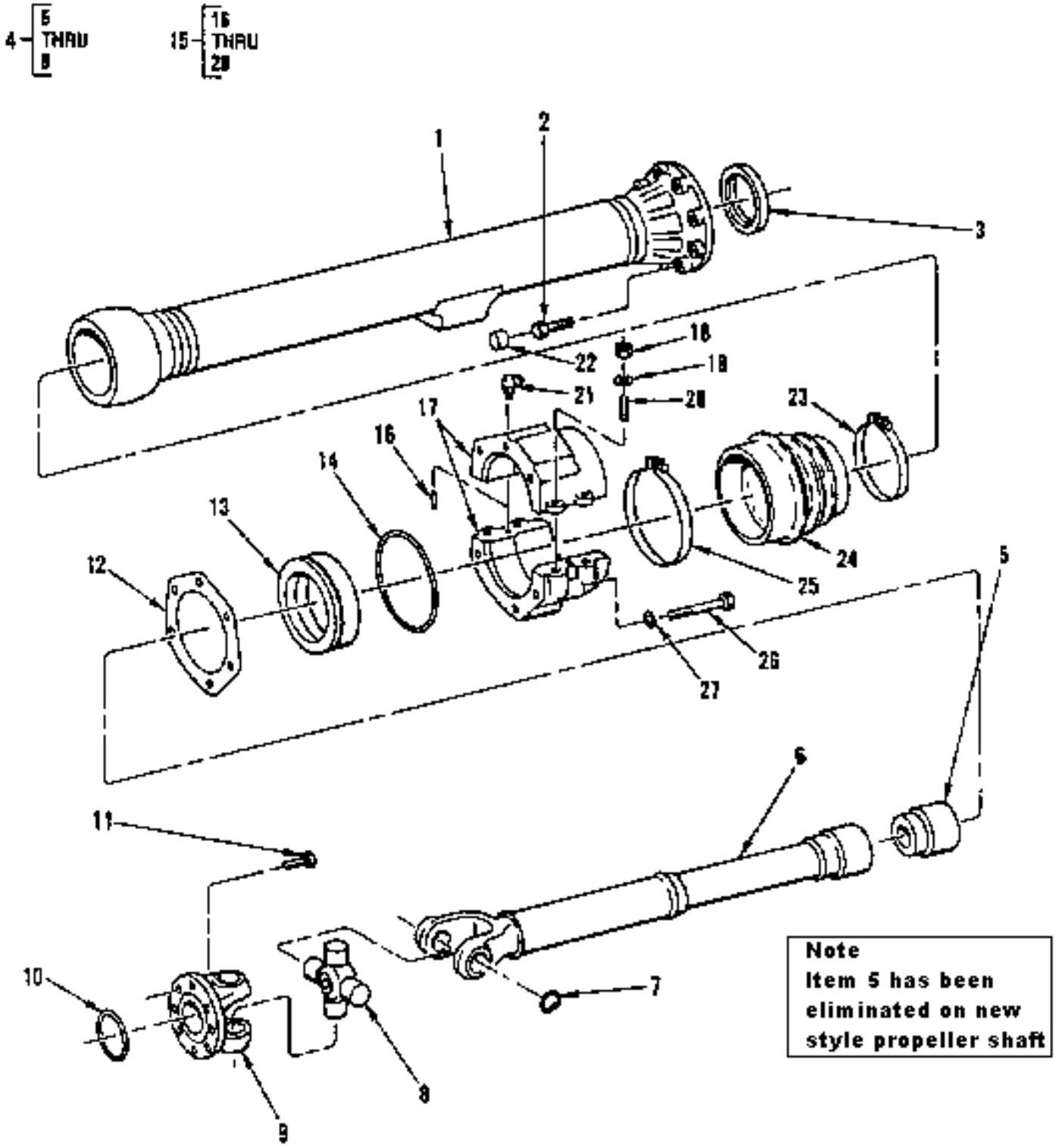

Figure 127. Propeller Shafts - Propeller Shaft, and Thrust Ball Housing

REAR