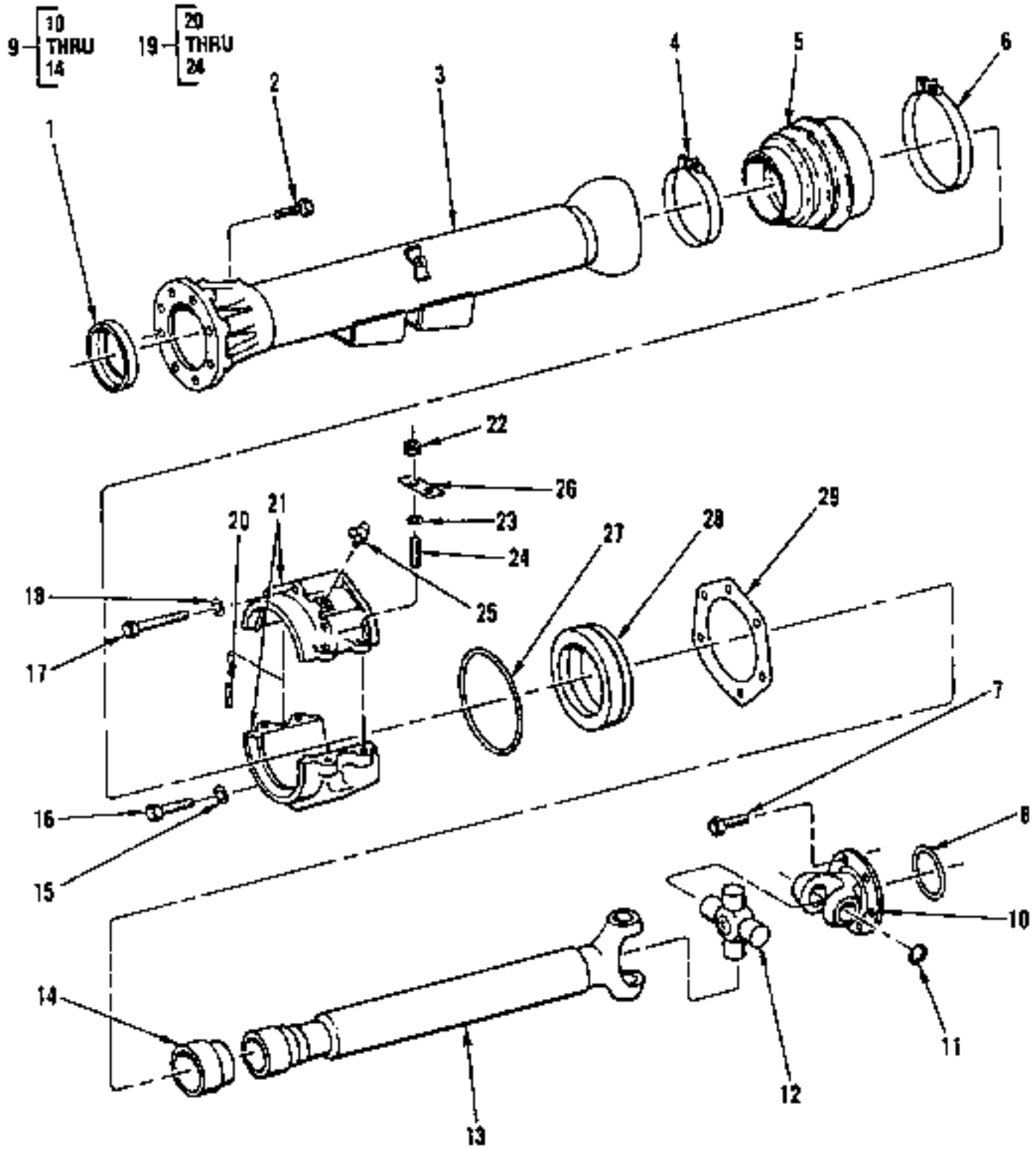

Figure 126. Propeller and Propeller Shafts - Propeller Shaft, and Thrust Ball Housing.

Front

Note
Item 14 has been eliminated from the new style propeller shaft