65 th ENG
SMALL EMPLACEMENT EXCAVATOR
SEE
UNIT / MAINTENANCE
STUDENT HANDOUT

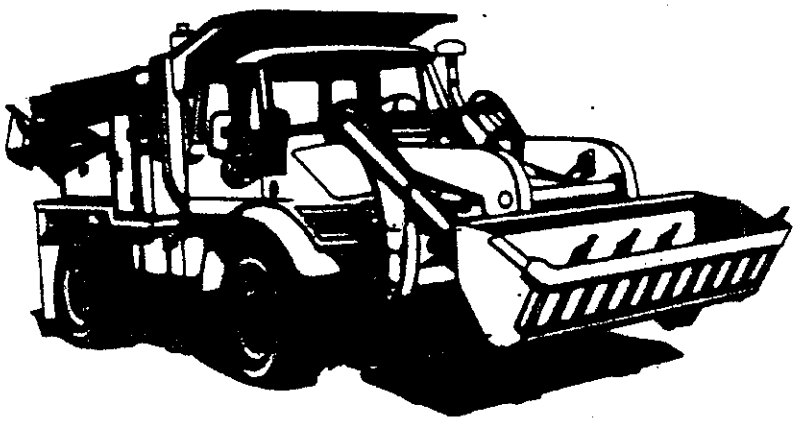

Prepared by:

NEW EQUIPMENT TRAINING BRANCH

US ARMY TANK -AUTOMOTIV -ARMAMENTS COMMAND

Warren, Michigan 48397-5000

JULY 1996

APPENDIX A

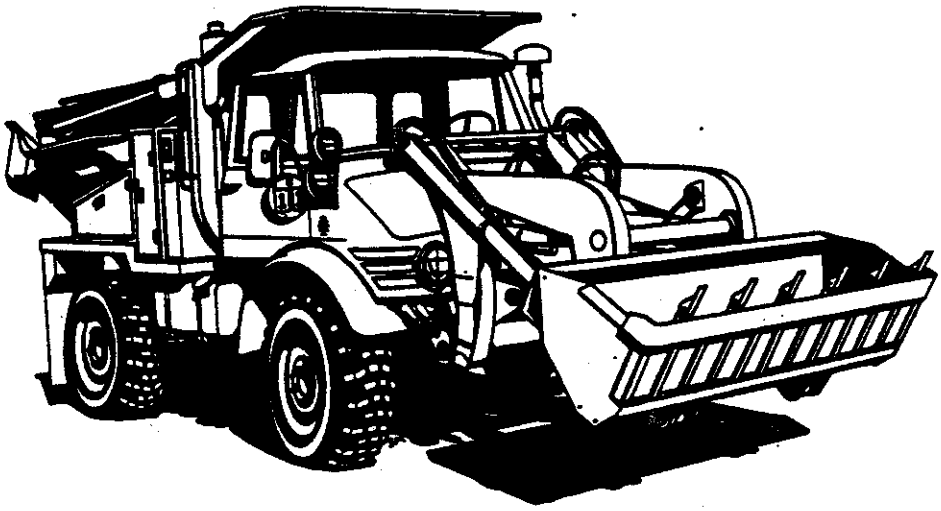

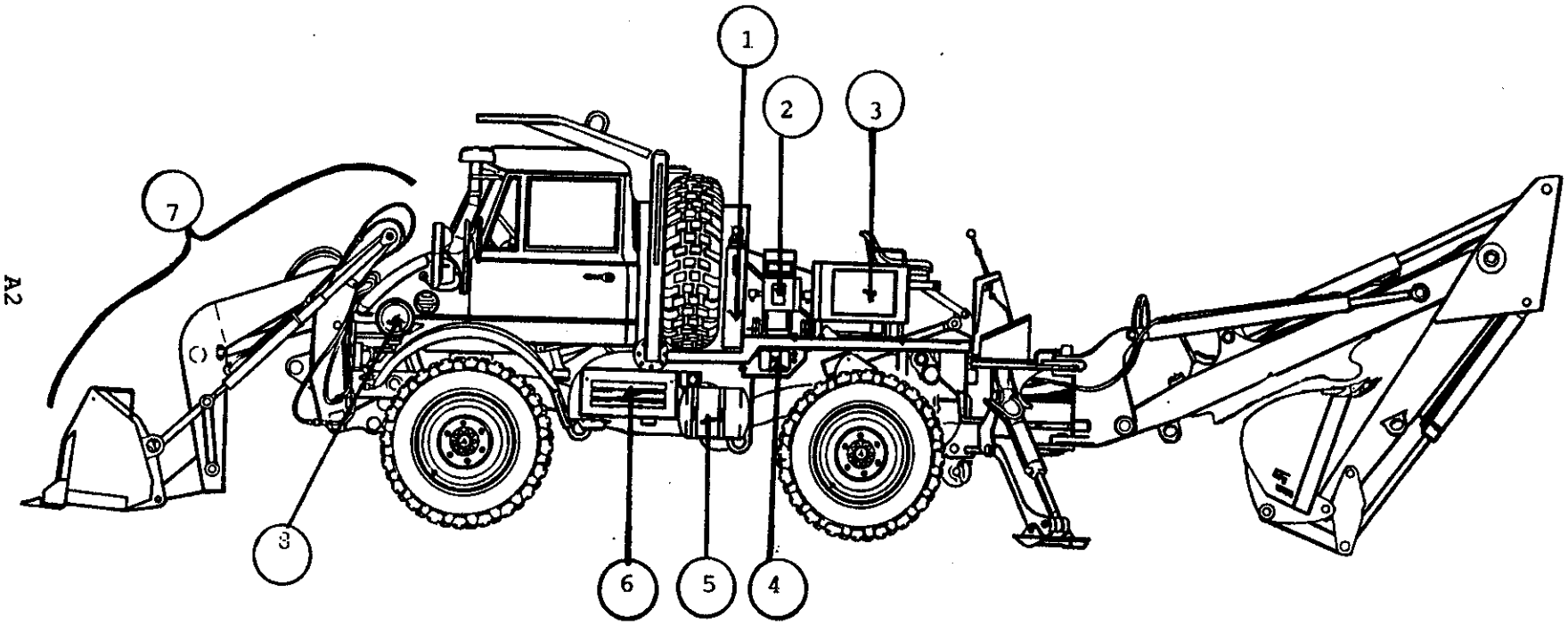

1. FRONT HYDRAULIC SYSTEM RESERVOIR
2. HYDRAULIC HAND TOOL HOSE REEL
3. DUAL HYDRAULIC OIL COOLER
4. BACKHOE TILT AND LOCK CONTROLS, TOOL AND WORK LIGHT SWITCHES
5. AIR SYSTEM RESERVOIR
6. BATTERY BOX
7. FRONT LOADER
8. AIR CLEANER

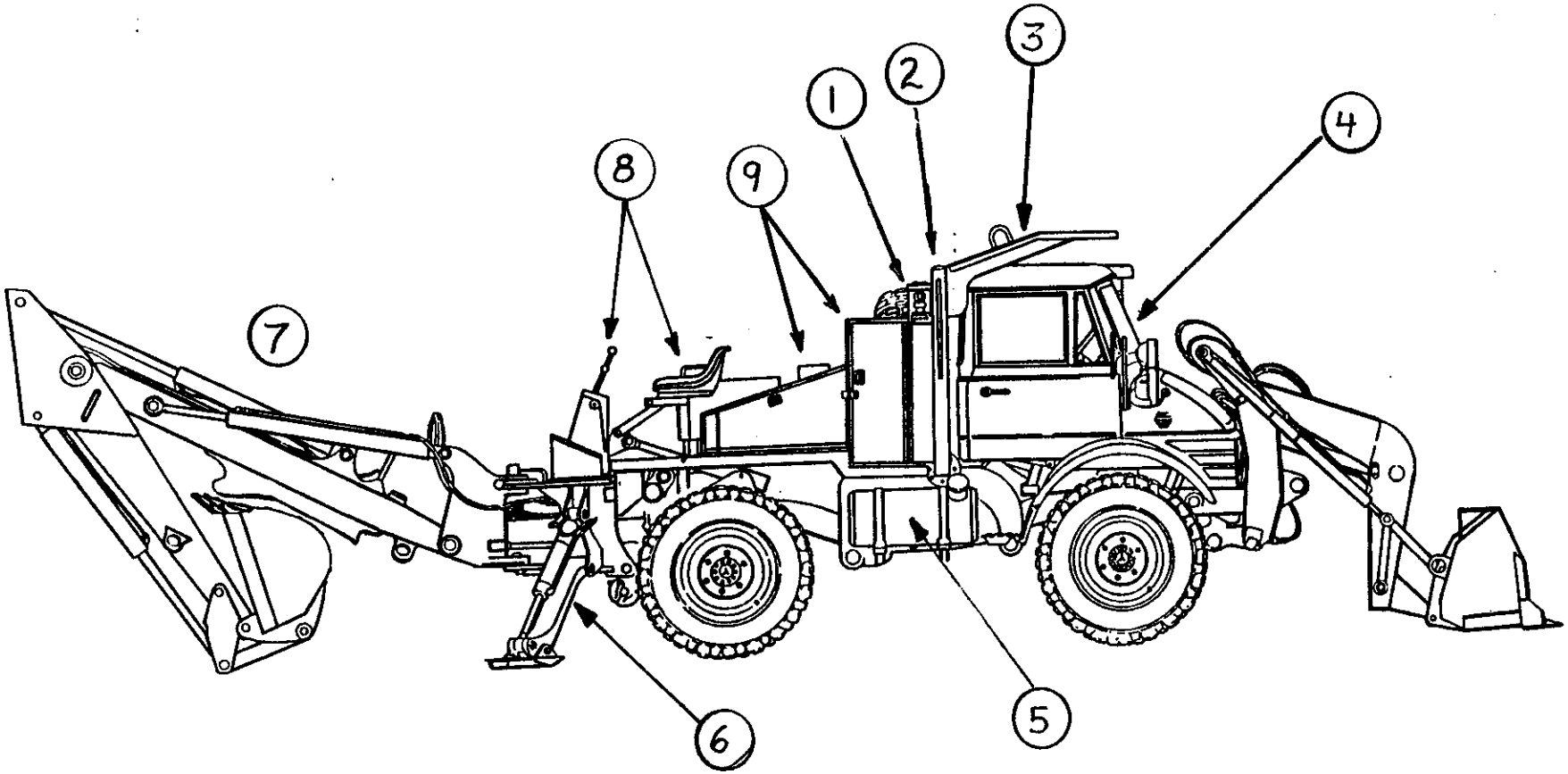

1. REAR HYDRAULIC SYSTEM RESERVOIR
2. ROLL OVER PROTECTION SYSTEM (ROPS)
3. FALLING OBJECT PROTECTION SYSTEM (FOPS)
4. TWO PERSONNEL STEEL CABS
5. FUEL TANK
6. BACKHOE STABALIZER
7. BACKHOE ASSEMBLY
8. BACKHOE OPERATOR SEAT AND CONTROLS
9. HYDRAULIC HAND TOOL STORAGE COMPARTMENTS

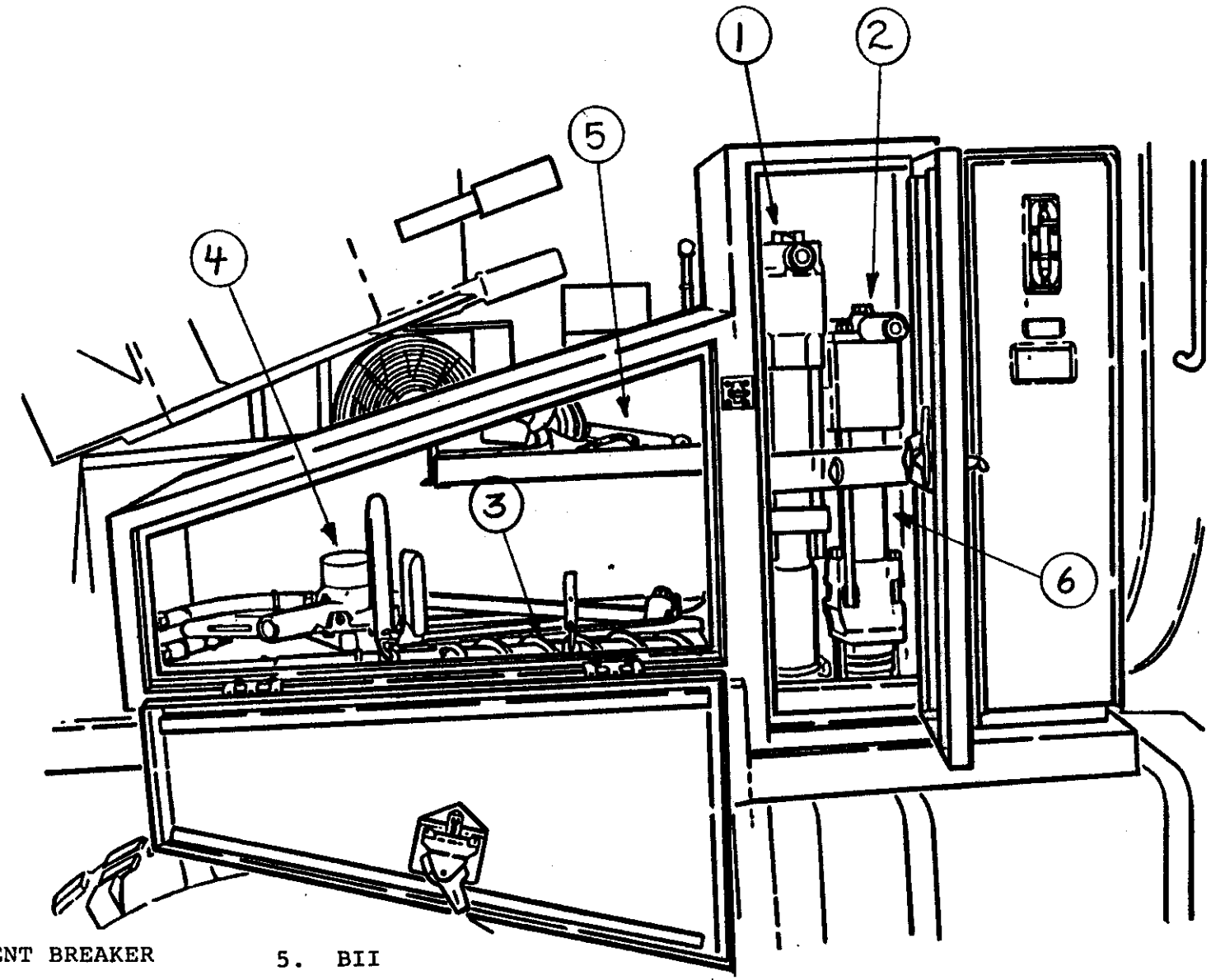

1. PAVEMENT BREAKER
2. HAMMER DRILL
3. BREAKER AND DRILL BITS
4. CHAIN SAW
5. BII
6. REMOVABLE RIPPER

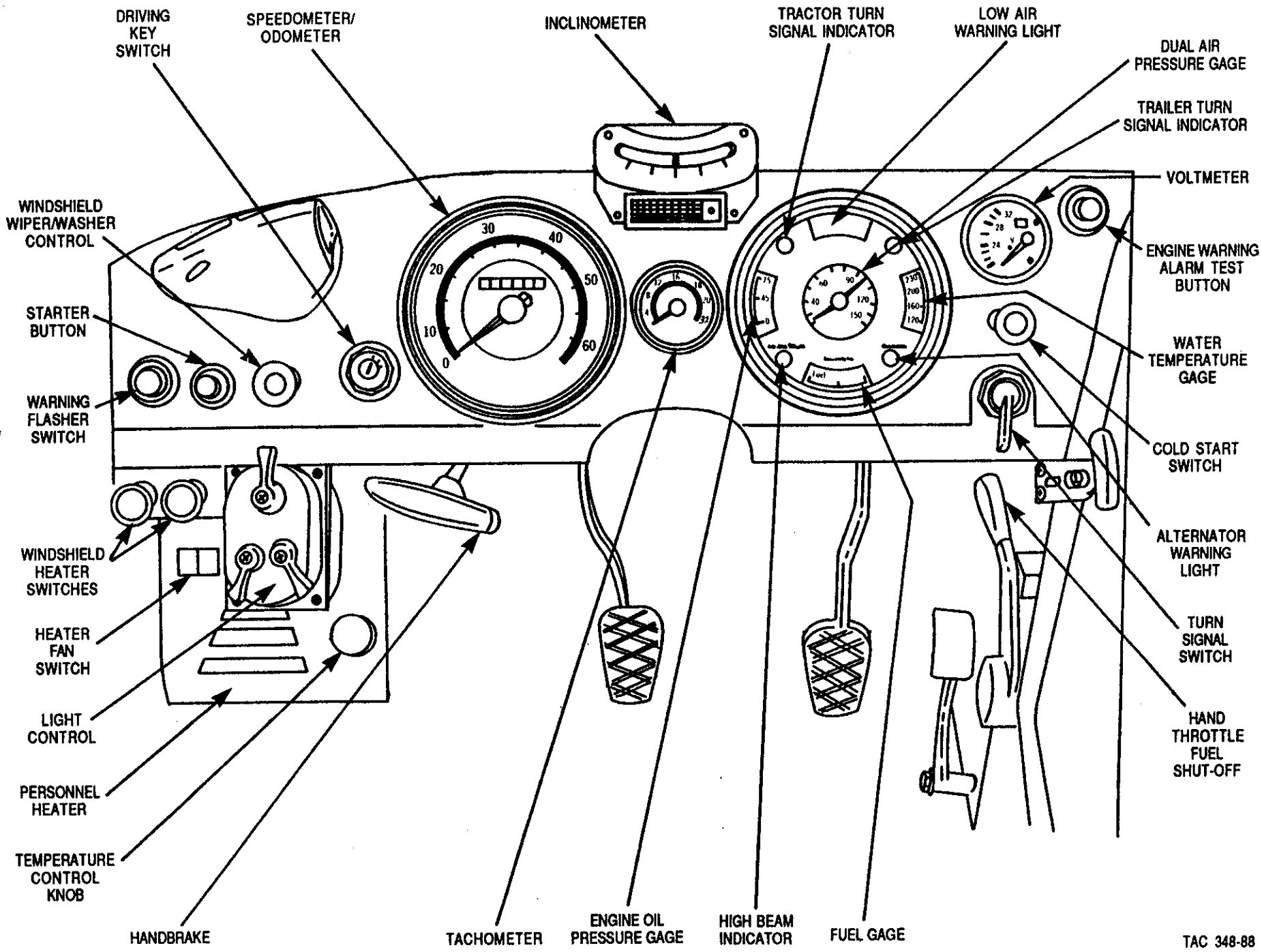
DRIVING KEY SWITCH
SPEEDOMETER/ ODOMETER
INCLINOMETER
TRACTOR TURN SIGNAL INDICATOR
LOW AIR WARNING LIGHT
DUAL AIR PRESSURE GAGE
TRAILER TURN SIGNAL INDICATOR
VOLTMETER
WINDSHIELD WIPER/WASHER CONTROL
ENGINE WARNING ALARM TEST BUTTON
STARTER BUTTON
WATER TEMPERATURE GAGE
WARNING FLASHER SWITCH
COLD START SWITCH
ALTERNATOR WARNING LIGHT
WINDSHIELD HEATER SWITCHES
TURN SIGNAL SWITCH
HEATER FAN SWITCH
HAND THROTTLE FUEL SHUT-OFF
LIGHT CONTROL
PERSONNEL HEATER
TEMPERATURE CONTROL KNOB
HANDBRAKE
TACHOMETER
ENGINE OIL PRESSURE GAGE
HIGH BEAM INDICATOR
FUEL GAGE
TAC 348-88

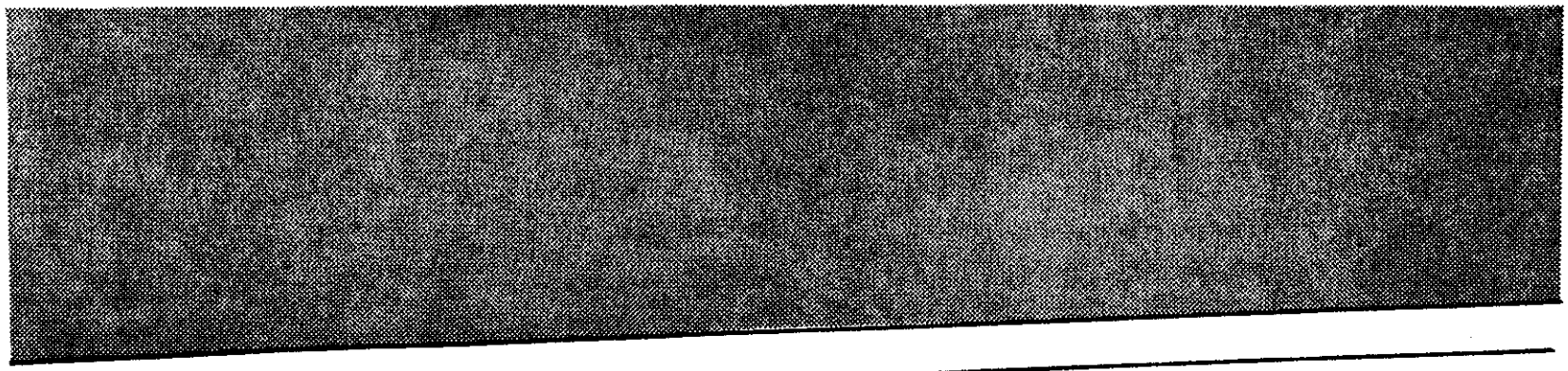

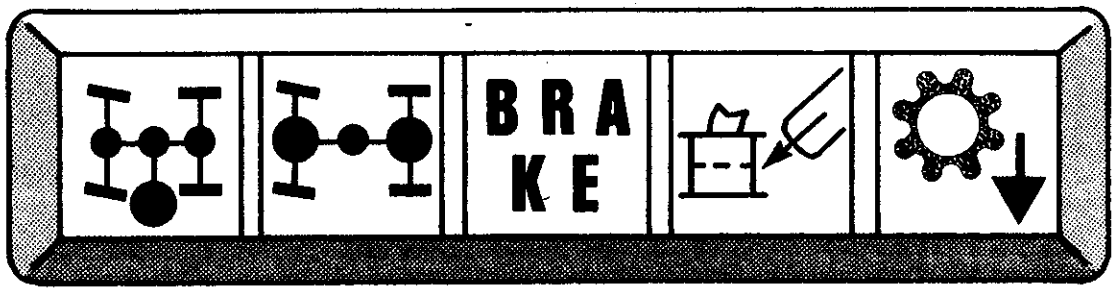

PTO

DIFF LOCK

HAND BRAKE APPLIED, FRONT PADS WORN, OR RESERVOIRS LOW

AIR RES-TRICTION

INTERMEDIATE LOW SPEED ENGAGED

GR0310-86

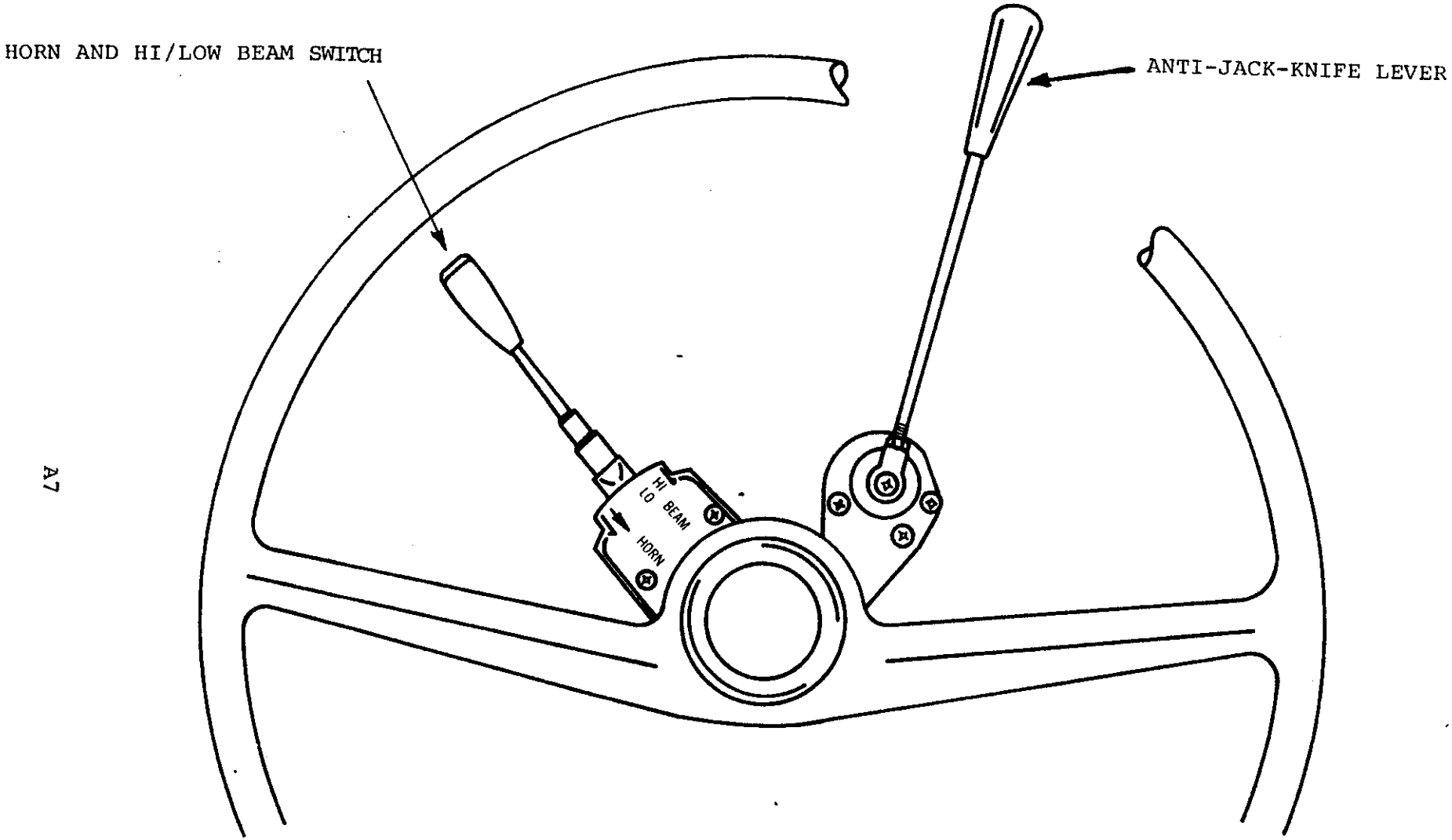
HORN AND HI/LOW BEAM SWITCH
ANTI-JACK-KNIFE LEVER
HI
LO
BEAM
HORN

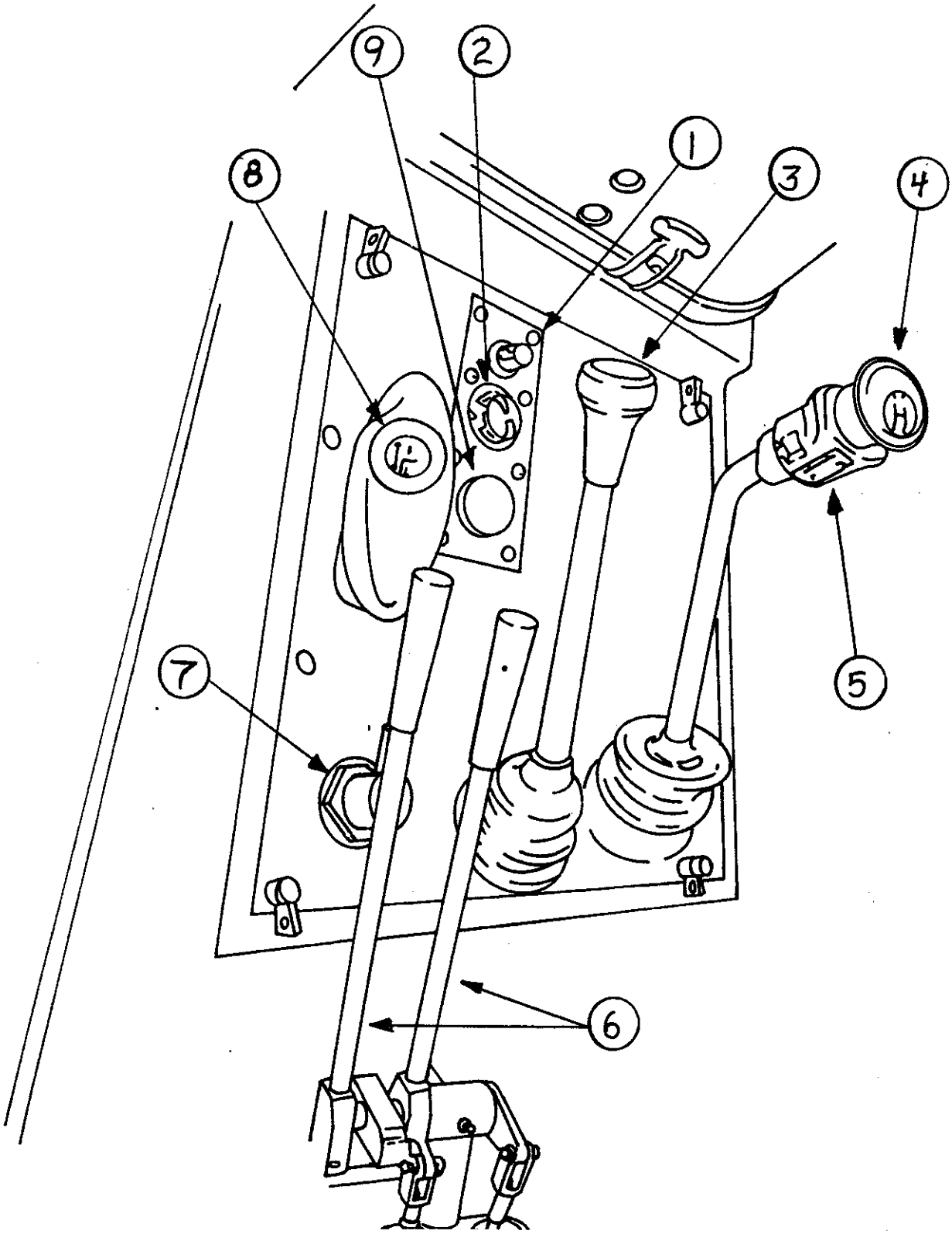

1. BATTERY DISCONNECT SWITCH
2. TRAILER BRAKE CHARGING VALVE
3. RANGE/DIRECTION SHIFT LEVER
4. MAIN TRANSMISSION SHIFT LEVER
5. INTERMEDIATE SPEED CONTROL
6. FRONT LOADER CONTROL LEVERS
7. FOUR-WHEEL DRIVE/DIFFERENTIAL LOCK SWITCH
8. POWER TAKE OFF SHIFT LEVER
9. DIAGNOSTIC CONNECTOR ASSEMBLY STE/1C

SMALL EMPLACEMENT EXCAVATOR (SEE)
STUDENT HANDOUT - MAINTENANCE
SCHEMATIC SET

TABLE OF CONTENTS

PAGE	DIAGRAM	DESCRIPTION
1		WIRE INDEX
2		WIRE INDEX (CON'T.)
	1 (SHEET 1 OF 2) FO	ELECTRICAL DIAGRAM
	1 (SHEET 2 OF 2)	ELECTRICAL DIAGRAM, IMPLEMENT WIRING
	2 (FOLDOUT)	STARTING CIRCUIT DIAGRAM
	3 (FOLDOUT)	CHARGING CIRCUIT DIAGRAM
	4 (SHEET 1 OF 2)	STE/ICE WIRING DIAGRAM
	4 (SHEET 2 OF 2)	STE/ICE WIRING DIAGRAM (CON'T.)
3		FUSE PANEL INDEX
4		ELECTRICAL RELAY POSITION
	5	HYDRAULIC BRAKE DIAGRAM
	6	AIR SYSTEM DIAGRAM
	7	AIR SYSTEM DIAGRAM, INITIAL CHARGE
	8	AIR SYSTEM DIAGRAM, STAGE I BRAKE BOOST
	9	AIR SYSTEM DIAGRAM, STAGE II BRAKE BOOST
	10	AIR SYSTEM DIAGRAM, ACCESSORIES
	11	AIR SYSTEM DIAGRAM, TRAILER BRAKE
	12	AIR SYSTEM DIAGRAM, TRAILER BRAKE
	13	AIR SYSTEM DIAGRAM, WHEN BEING TOWED

SMALL EMPLACEMENT EXCAVATOR (SEE)
STUDENT HANDOUT - MAINTENANCE
SCHEMATIC SET

TABLE OF CONTENTS (CONTINUED)

PAGE	DIAGRAM	DESCRIPTION
5		STANDARD GRAPHIC HYDRAULIC SYMBOLS
6		STANDARD GRAPHIC HYDRAULIC SYMBOLS (CON'T.)
7		STANDARD GRAPHIC HYDRAULIC SYMBOLS (CON'T.)
	14 (SHEET 1 OF 2) FO	HYDRAULIC SCHEMATIC, FRONT SYSTEM
	14 (SHEET 2 OF 2) FO	HYDRAULIC SCHEMATIC, FL-4 FRONT LOADER
	15 (FOLD OUT)	HYDRAULIC SCHEMATIC, FRONT SYSTEM
	16 (SHEET 1 OF 2) FO	HYDRAULIC SCHEMATIC, BACKHOE TILT & LOCK
	16 (SHEET 2 OF 2) FO	HYDRAULIC SCHEMATIC, BACKHOE & STABILIZERS
8		BACKHOE CIRCUIT RELIEF PRESSURES

SMALL EMPLACEMENT EXCAVATOR (SEE)

WIRE INDEX

THE WIRE INDEX IS TO IDENTIFY INDIVIDUAL ELECTRICAL CIRCUITS ACCORDING TO THE WIRE NUMBERS.

NOTE

SOME WIRE NUMBERS BELOW ARE FOLLOWED BY A (-). THIS REPRESENTS ANY NUMBERS THAT FOLLOW. FOR EXAMPLE: 64- HORN. THIS MEANS ANY NUMBERS THAT START WITH 64, i.e., 641, 642, 643, etc., PERTAIN TO THE HORN CIRCUIT.

0-	GROUNDS
1	REVERSE POLARITY SWITCH TO STARTER SOLENOID
11	STARTER SOLENOID TO DRIVING KEY SWITCH
111	STARTER SOLENOID TO B.O. LIGHT SWITCH
12	DRIVING KEY SWITCH TO FUSE BOX
121	DRIVING KEY SWITCH TO VOLTMETER
131	DRIVING KEY SWITCH TO FUSE BOX
132	DRIVING KEY SWITCH TO STARTER RELAY
141	ALTERNATOR TO REVERSE POLARITY SWITCH
21	DRIVING KEY SWITCH TO REVERSE POLARITY SWITCH
21-	STARTING SYSTEM
22-	INDICATOR LIGHTS (PTO, DIFF LOCK, BRAKE RESERVOIRS, INTERMEDIATE SPEED)
23-	INTERMEDIATE SPEED SHIFT CIRCUIT
28-	KBI (COLD START)
30	FUEL SENDING UNIT
30-	ENGINE WARNING ALARM CIRCUIT
31-	SENDING UNITS, OIL PRESS/WATER TEMP.
31S	TACHOMETER SENSOR
33-	LOW AIR PRESSURE ALARM/LIGHT
34	GROUND FOR CHARGING WARNING LIGHT/TACHOMETER
34-	ALTERNATOR TO NON-REPEAT RELAY AND ENGINE WARNING ALARM SYSTEM

SMALL EMPLACEMENT EXCAVATOR (SEE)

WIRE INDEX (CON'T.)

35-	BACK-UP ALARM
36-	TACHOMETER/CHARGING WARNING LIGHT
37	DRIVING KEY SWITCH TO COMBINATION GAUGE
371	AIR FILTER RESTRICTION INDICATOR
372	FUSE BOX TO INDICATOR LAMPS
39-	TURN SIGNAL INDICATOR LAMPS

ALL WIRE NUMBERS THAT BEGIN WITH 4 ARE FOR LIGHTS

40-	B.O. HEADLIGHT
41-	HEADLIGHTS/PARKLIGHTS
42-	UPPER HEADLIGHTS/REAR WORK LIGHTS
43-	CAB INTERIOR LIGHT
44-	REAR TURN SIGNAL LIGHTS/BRAKE LIGHTS
45-	FRONT TURN SIGNAL LIGHTS
46-	WARNING LIGHT SENDING UNIT TO WARNING LIGHT SWITCH
47-	B.O. BRAKE LIGHTS
48-	B.O. MARKER LIGHTS
49-	DASH PANEL LIGHTS

ALL WIRE NUMBERS THAT BEGIN WITH 6 ARE FOR CAB ACCESSORIES

61-	HEATER FAN
62-	WINDSHIELD HEATER CIRCUIT
63-	WIPER/WASHER CIRCUIT
64-	HORN
66-	UTILITY OUTLET
70-	IMPLEMENT WIRING

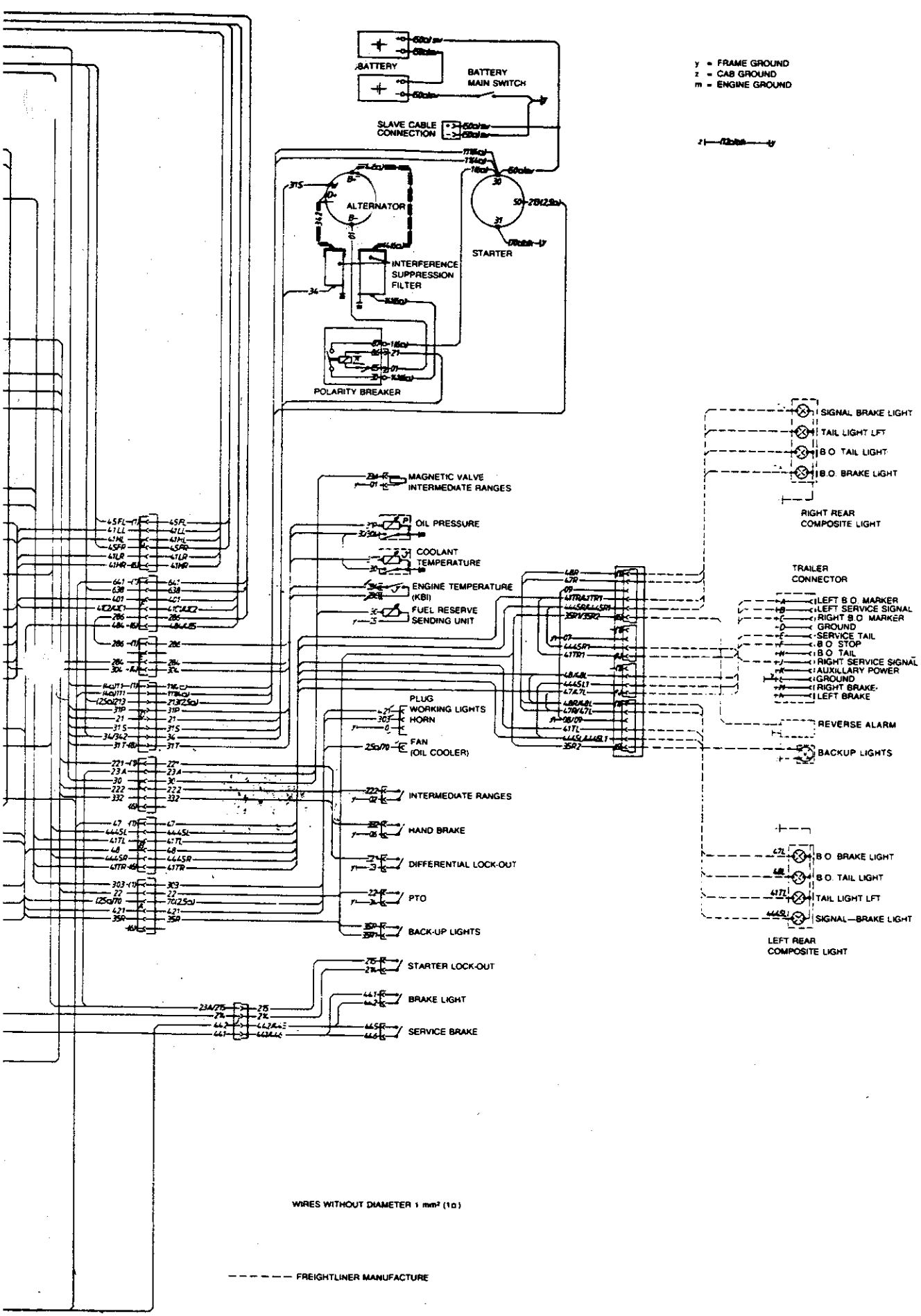

DIAGRAM 1 SEE ELECTRICAL (SHEET 1 OF 2

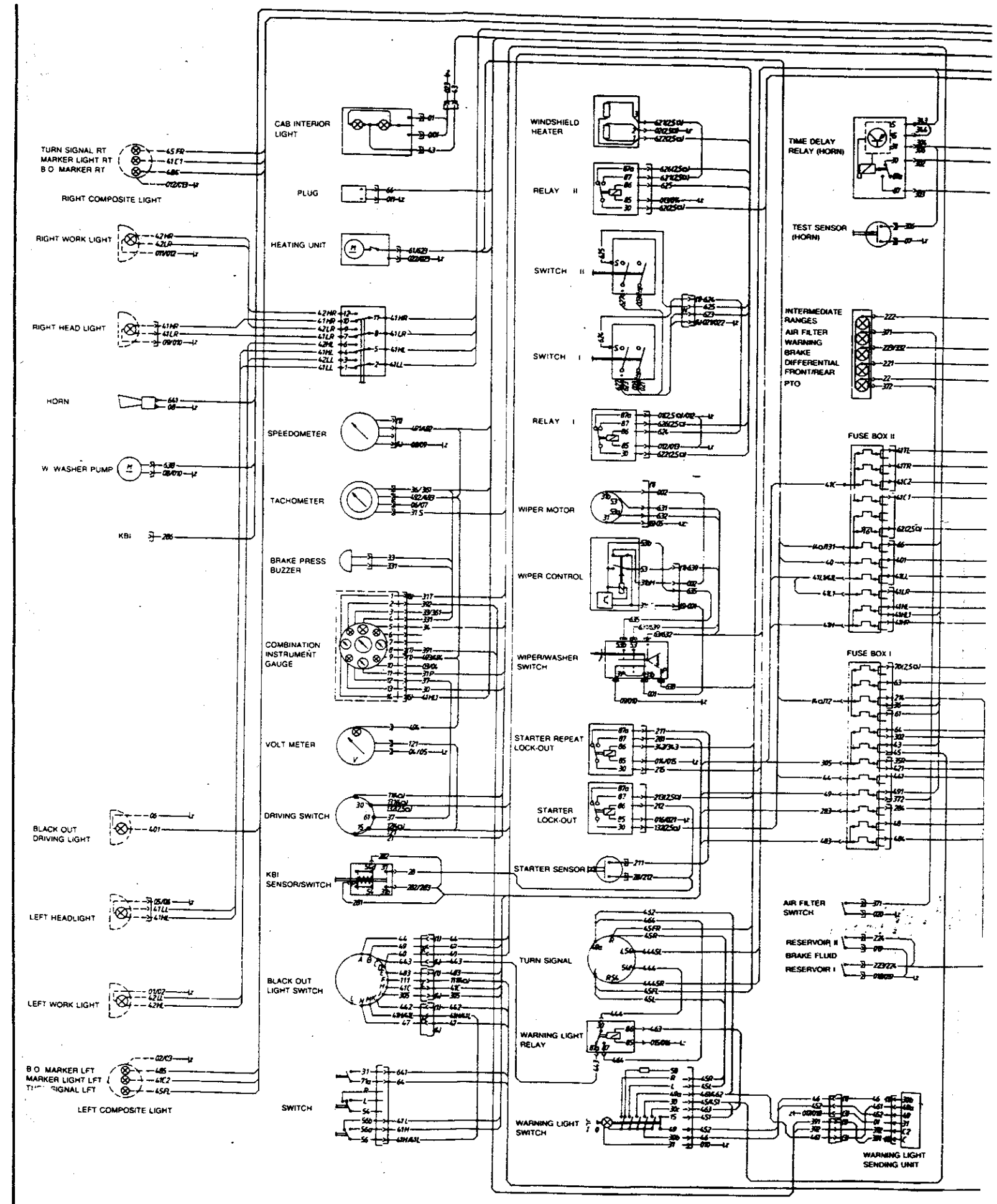
TURN SIGNAL RT
MARKER LIGHT RT
B O MARKER RT
RIGHT COMPOSITE LIGHT
RIGHT WORK LIGHT
RIGHT HEAD LIGHT
HORN
W WASHER PUMP
KBI
BLACK OUT DRIVING LIGHT
LEFT HEADLIGHT
LEFT WORK LIGHT
B O MARKER LFT
MARKER LIGHT LFT
TURN SIGNAL LFT
LEFT COMPOSITE LIGHT
CAB INTERIOR LIGHT
PLUG
HEATING UNIT
SPEEDOMETER
TACHOMETER
BRAKE PRESS BUZZER
COMBINATION INSTRUMENT GAUGE
VOLT METER
DRIVING SWITCH
KBI SENSOR/SWITCH
BLACK OUT LIGHT SWITCH
SWITCH
WINDSHIELD HEATER
RELAY II
SWITCH II
SWITCH I
RELAY I
WIPER MOTOR
WIPER CONTROL
WIPER/WASHER SWITCH
STARTER REPEAT LOCK-OUT
STARTER LOCK-OUT
STARTER SENSOR
TURN SIGNAL
WARNING LIGHT RELAY
WARNING LIGHT SWITCH
TIME DELAY RELAY (HORN)
TEST SENSOR (HORN)
INTERMEDIATE RANGES
AIR FILTER
WARNING
BRAKE
DIFFERENTIAL
FRONT/REAR
PTO
FUSE BOX II
FUSE BOX I
AIR FILTER SWITCH
RESERVOIR II
BRAKE FLUID
RESERVOIR I
WARNING LIGHT SENDING UNIT

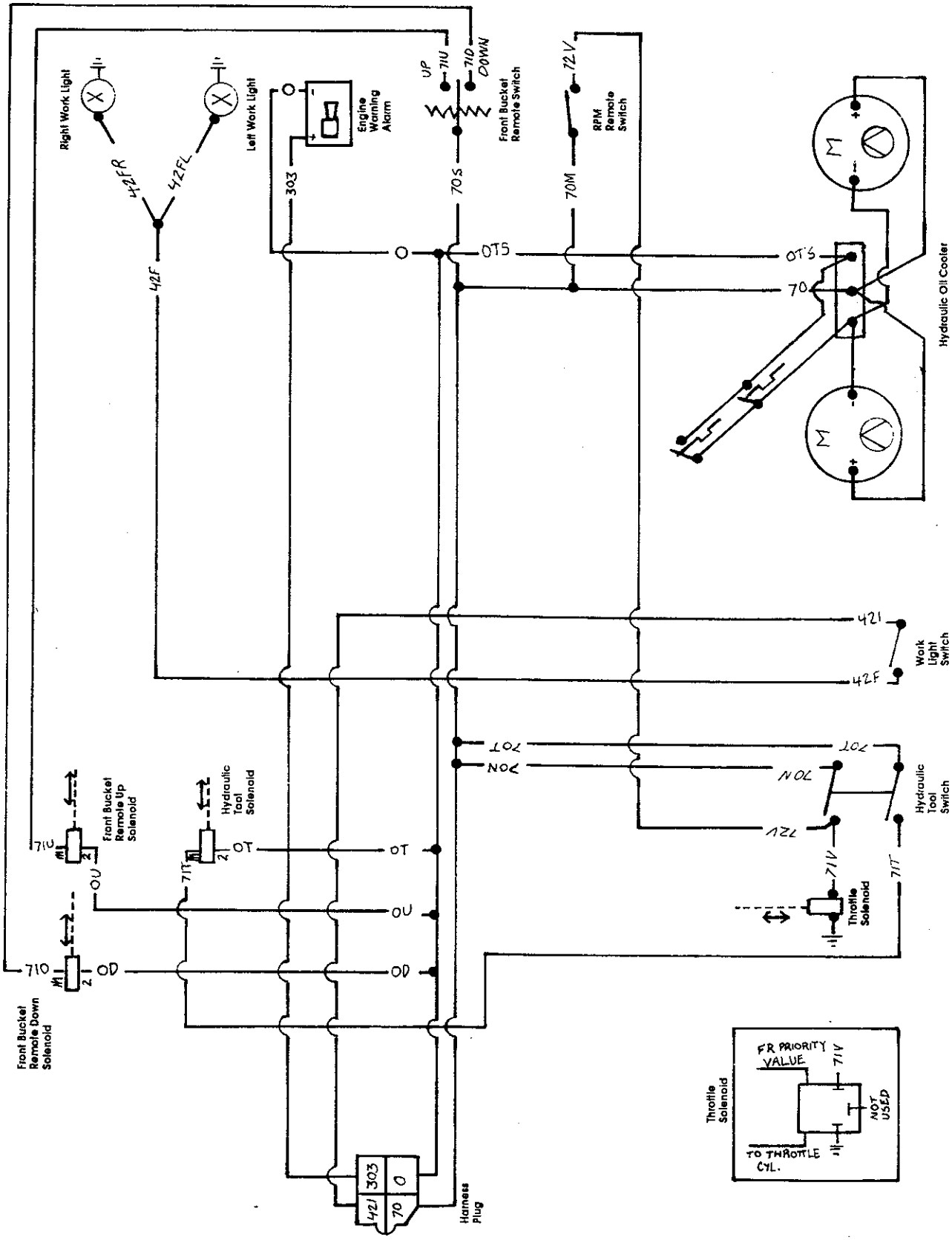

DIAGRAM 1

SEE ELECTRICAL

(SHEET 2 OF 2)

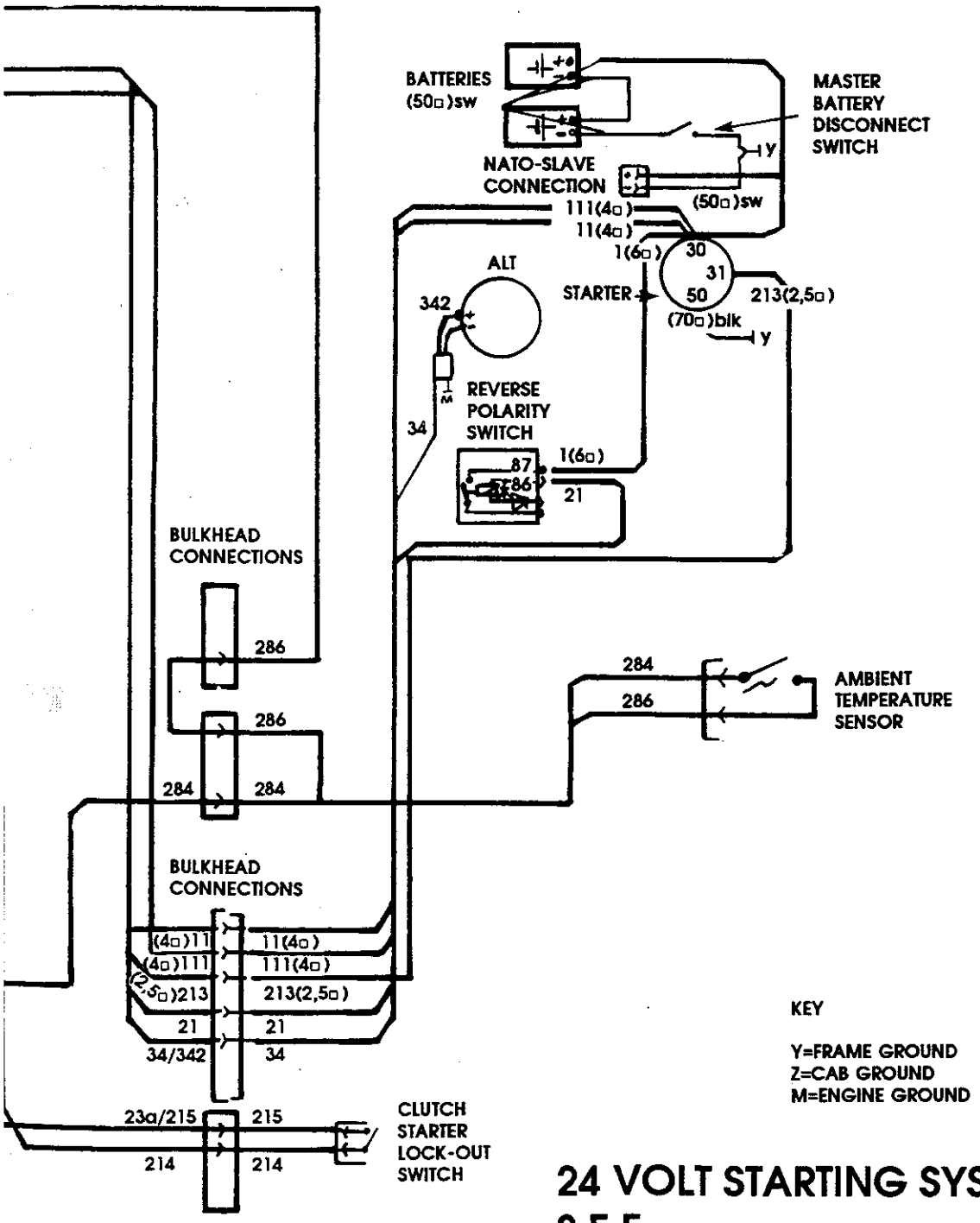

24 VOLT STARTING SYSTEM
S.E.E.
TRACTOR WHEEL 4x4 DED

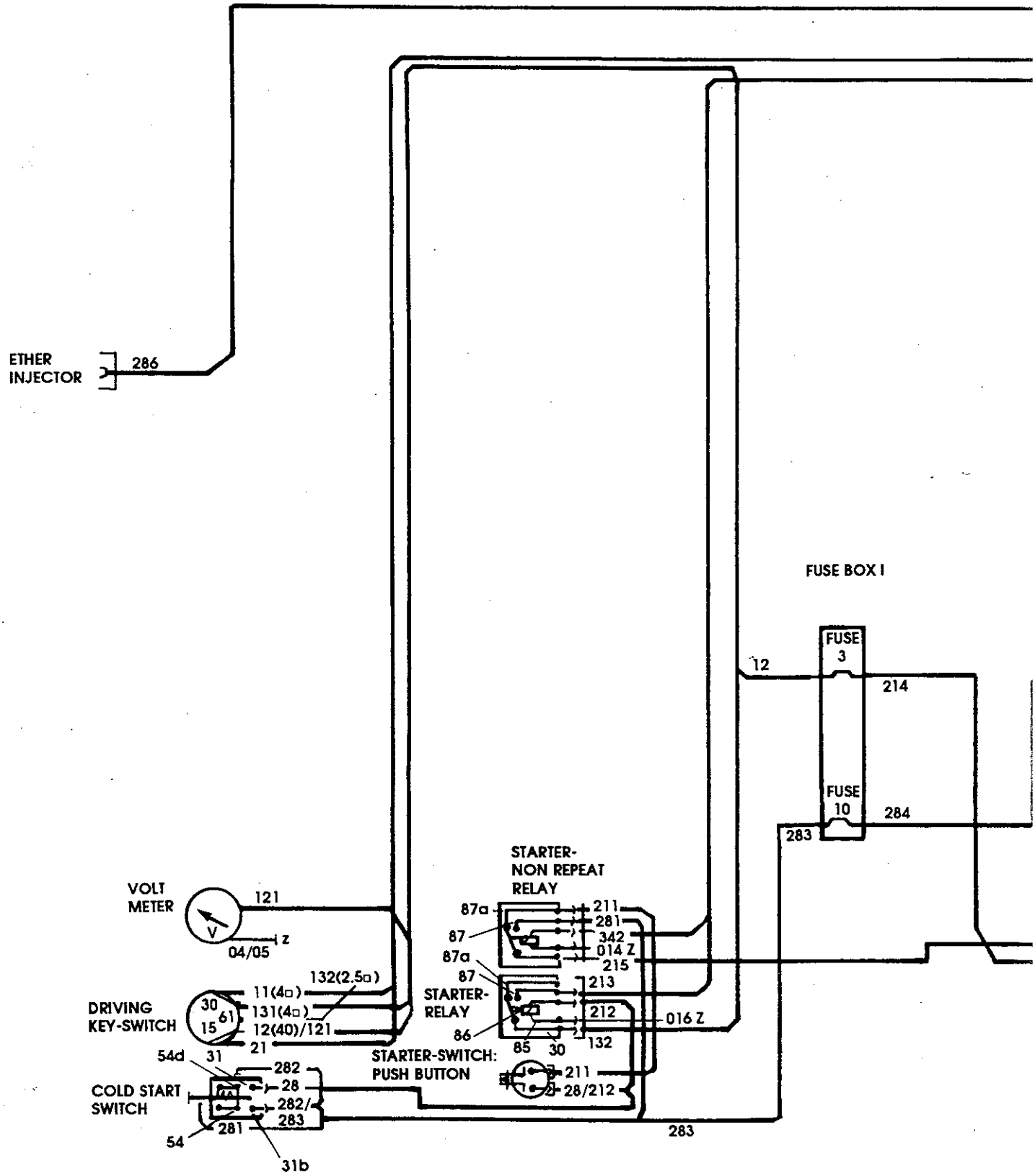
ETHER INJECTOR
286
FUSE BOX I
FUSE 3
FUSE 10
12
214
284
283
STARTER-NON REPEAT RELAY
87a
87
87a
87
86
85
30
211
281
342
014 Z
215
213
212
016 Z
132
STARTER-RELAY
STARTER-SWITCH: PUSH BUTTON
211
28/212
283
VOLT METER
121
V
z
04/05
DRIVING KEY-SWITCH
30
15
61
11(4□)
131(4□)
12(40)/121
21
132(2.5□)
COLD START SWITCH
54d
31
282
28
282/283
281
54
31b

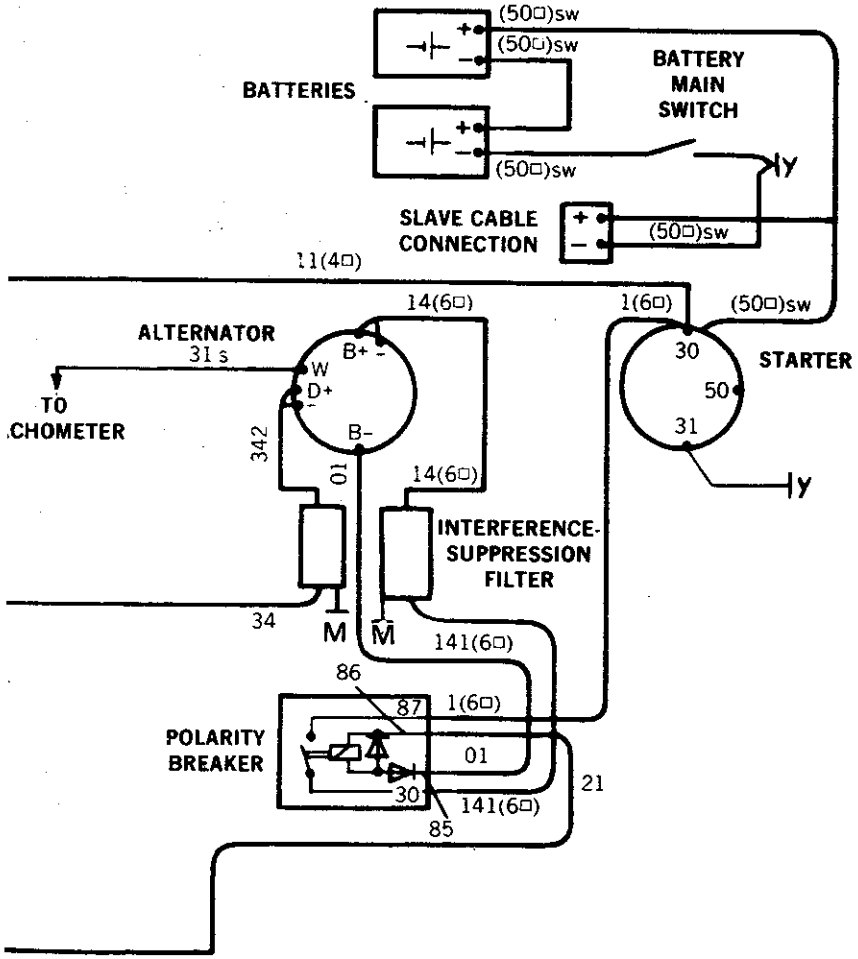

KEY

Y FRAME GROUND
Z CAB GROUND
M ENGINE GROUND

24 VOLT CHARGING SYSTEM
S.E.E.
TRACTOR WHEEL 4x4 DED

DIAGRAM 3

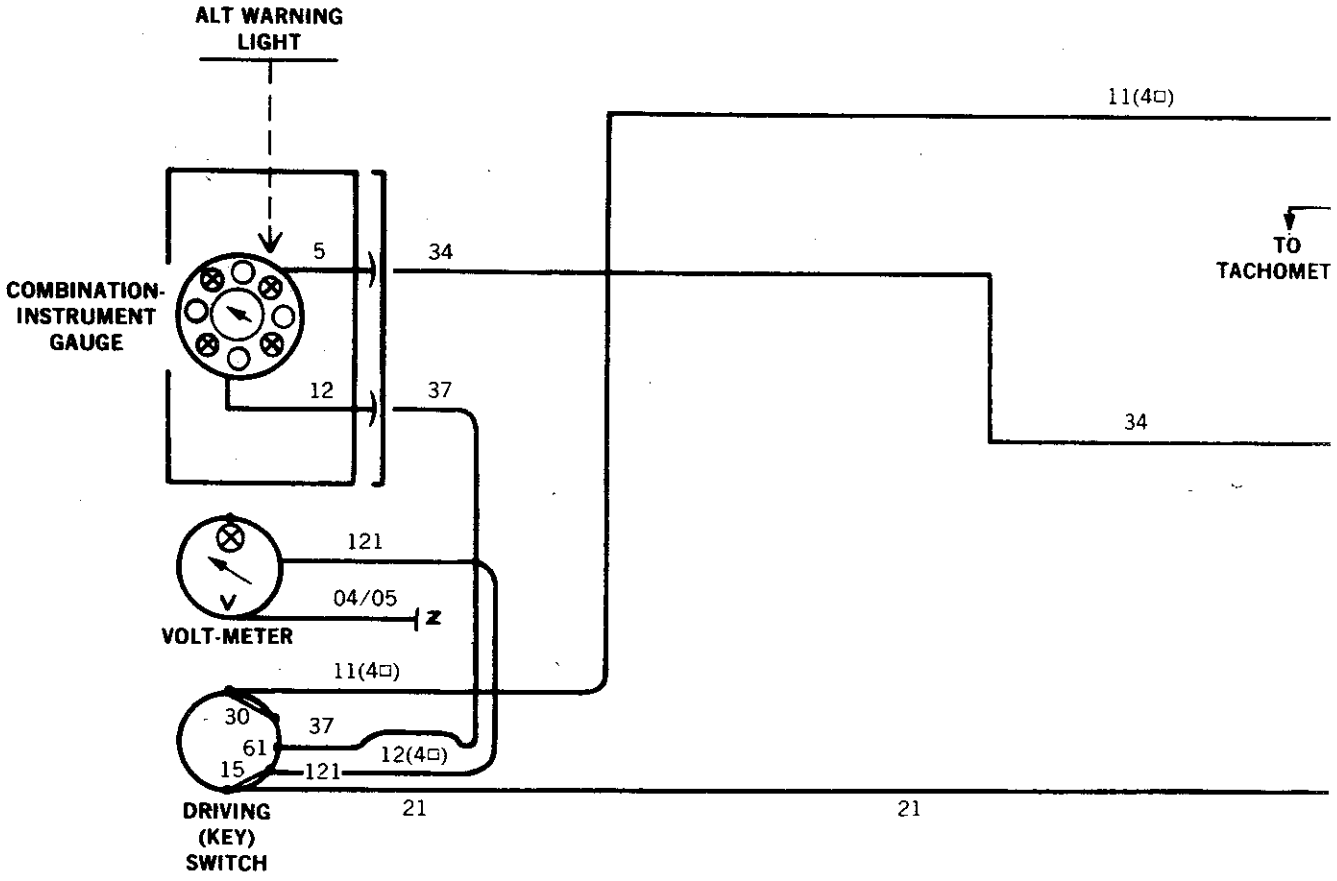
ALT WARNING LIGHT
COMBINATION-INSTRUMENT GAUGE
5
34
12
37
11(4□)
TO TACHOMET
34
121
04/05
Z
VOLT-METER
11(4□)
30
37
61
12(4□)
15
121
DRIVING (KEY) SWITCH
21
21

STE/ICE SYSTEM

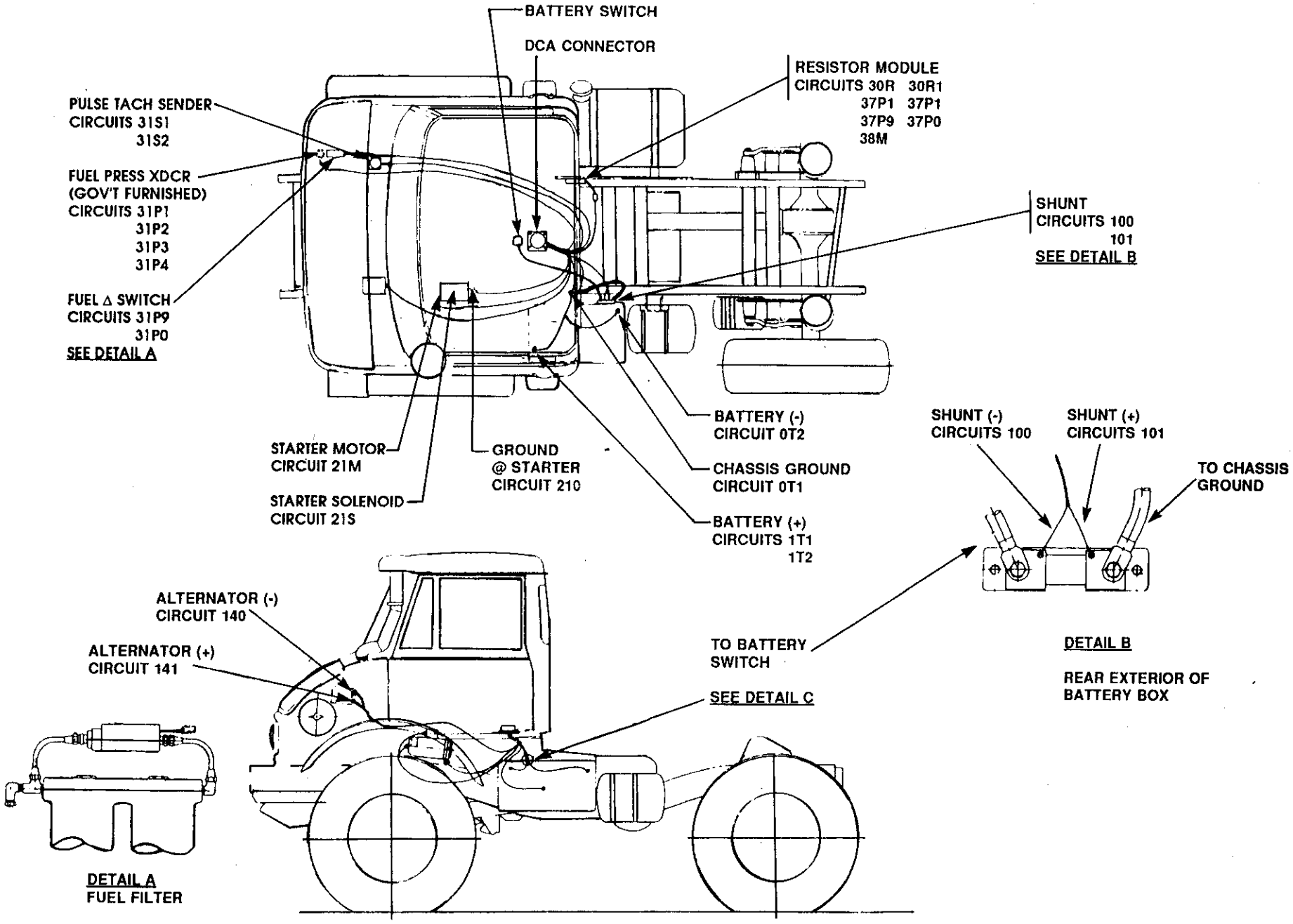

DIAGRAM 4

(SHEET 1 OF 2)

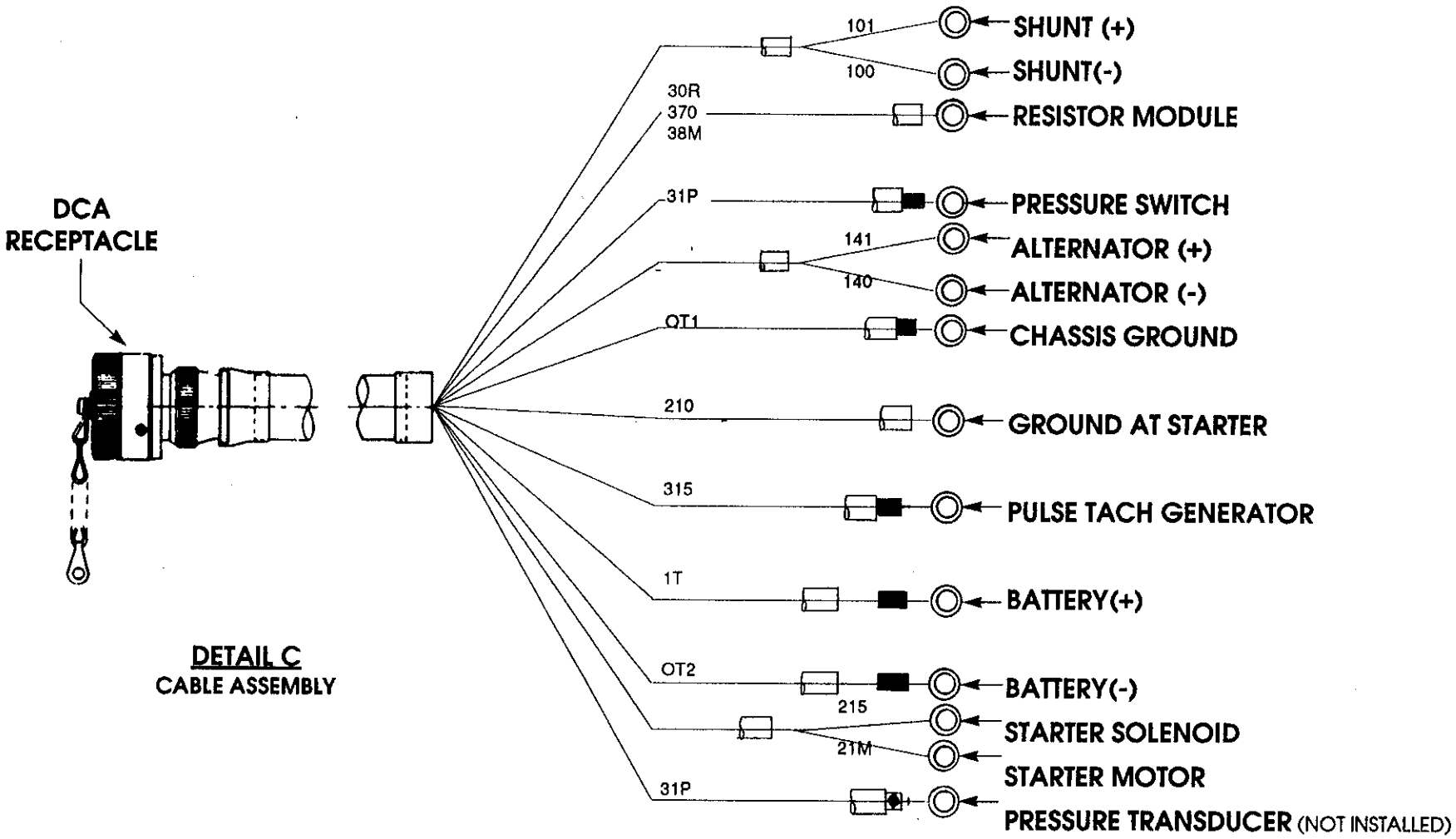

DIAGRAM 4

(SHEET 2 OF 2)

FUSE PANEL INDEX

FUSE INDEX	NO.	FUSE BOX II	A
F1	1	TAIL LIGHT LEFT	8
F2	2	TAIL LIGHT RIGHT	8
F3	3	SIDE MARKER LIGHT LEFT	8
F4	4	SIDE MARKER LEFT RIGHT	8
F5	5	SPARE	8
F6	6	HEATED WINDSHIELF	16
F7	7	SOCKET	8
F8	8	BLACKOUT HEAD LIGHT	8
F9	9	LOW BEAM LEFT	8
F10	10	LOW BEAM RIGHT	8
F11	11	HIGH BEAM LEFT HIGH BEAM LEFT INDICATOR LAMP, HIGH BEAM	8
F12	12	HIGH BEAM RIGHT	8

FUSE INDEX	NO.	FUSE BOX I	A
F13	1	AIR THROTTLE CONTROL CIRCUIT, OIL COOLER FAN AND TEMPERATURE SWITCH, TOOL CIRCUIT SWITCH, FRONT LOADER REMOTE CIRCUIT	16
F14	2	WINDSHIELD WIPER	8
F15	3	INSTRUMENTS, SAFETY START	8
F16	4	HEATING	8
F17	5	HORN, WARNING BUZZER	8
F18	6	TURN SIGNAL, HAZARD WARNING FLASHER, CAB LIGHT	8
F19	7	WORKING LAMP, BACKUP CONTROL	16
F20	8	STOP LIGHT	8
F21	9	CONTROL LAMP, INSTRUMENT LAMP	8
F22	10	KBI-COLD START SENSOR	8
F23	11	BLACKOUT TAIL LIGHT	8
F24	12	BLACKOUT HEAD LIGHT	8

ELECTRICAL RELAY POSITION

NOTE:

1. ALL RELAYS ARE INTER-CHANGEABLE
2. BOTH NON-REPEAT AND STARTER RELAYS MUST BE SERVICABLE TO START VEHICLE
3. RELAY SOCKET IDENTIFICATION:

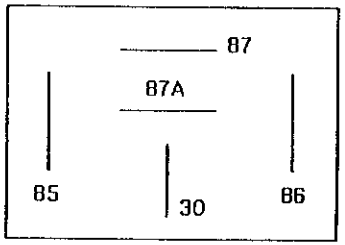

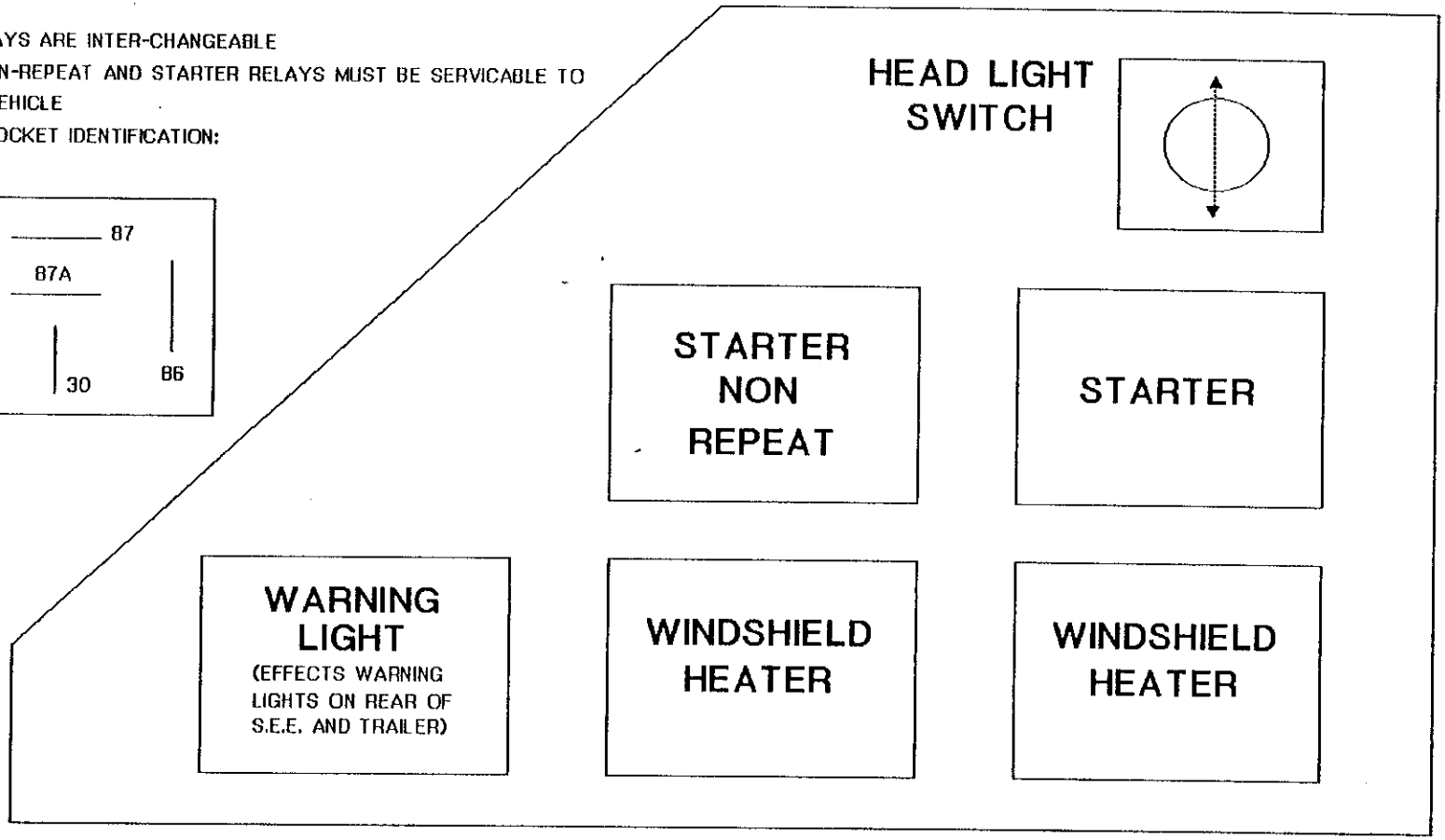

SEE HYDRAULIC BRAKE DIAGRAM

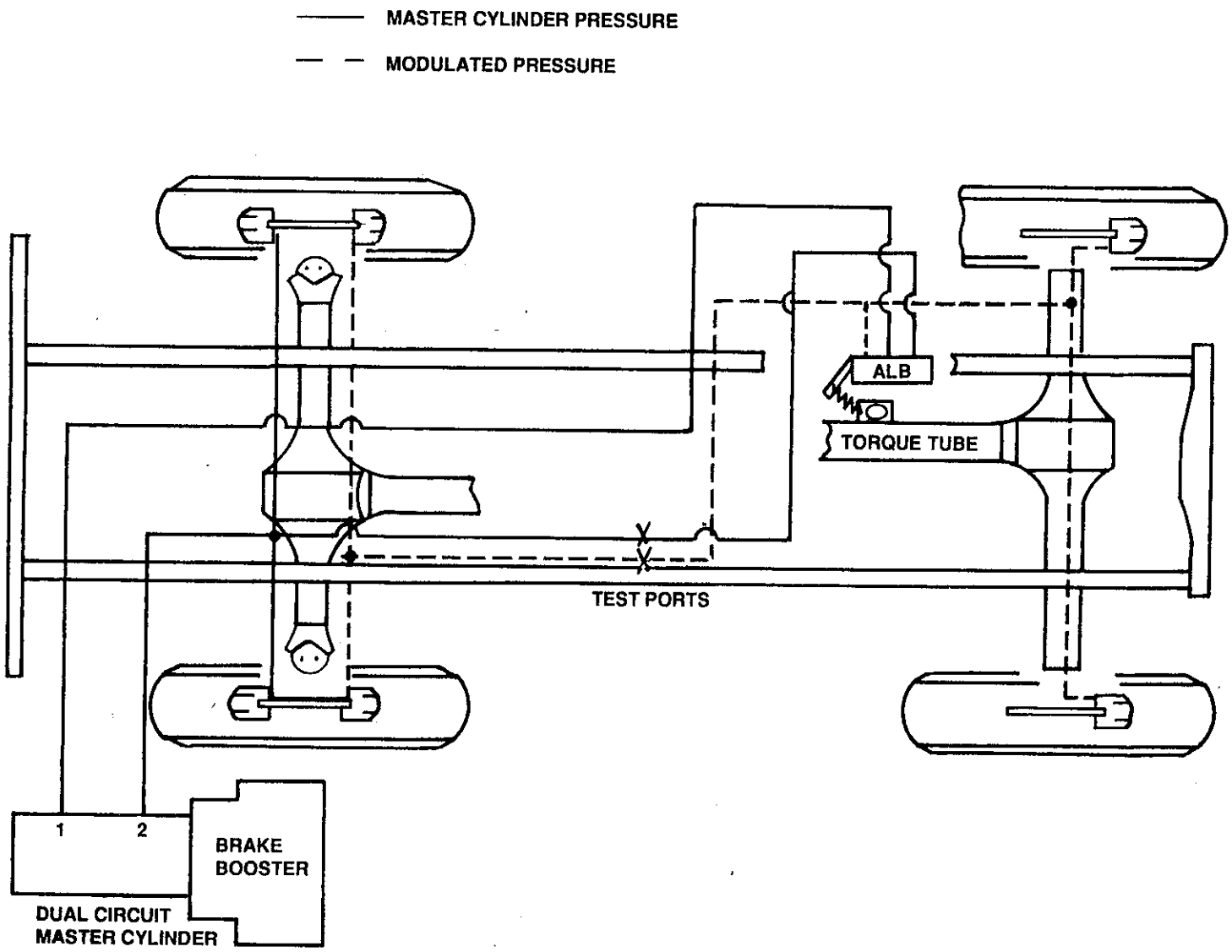

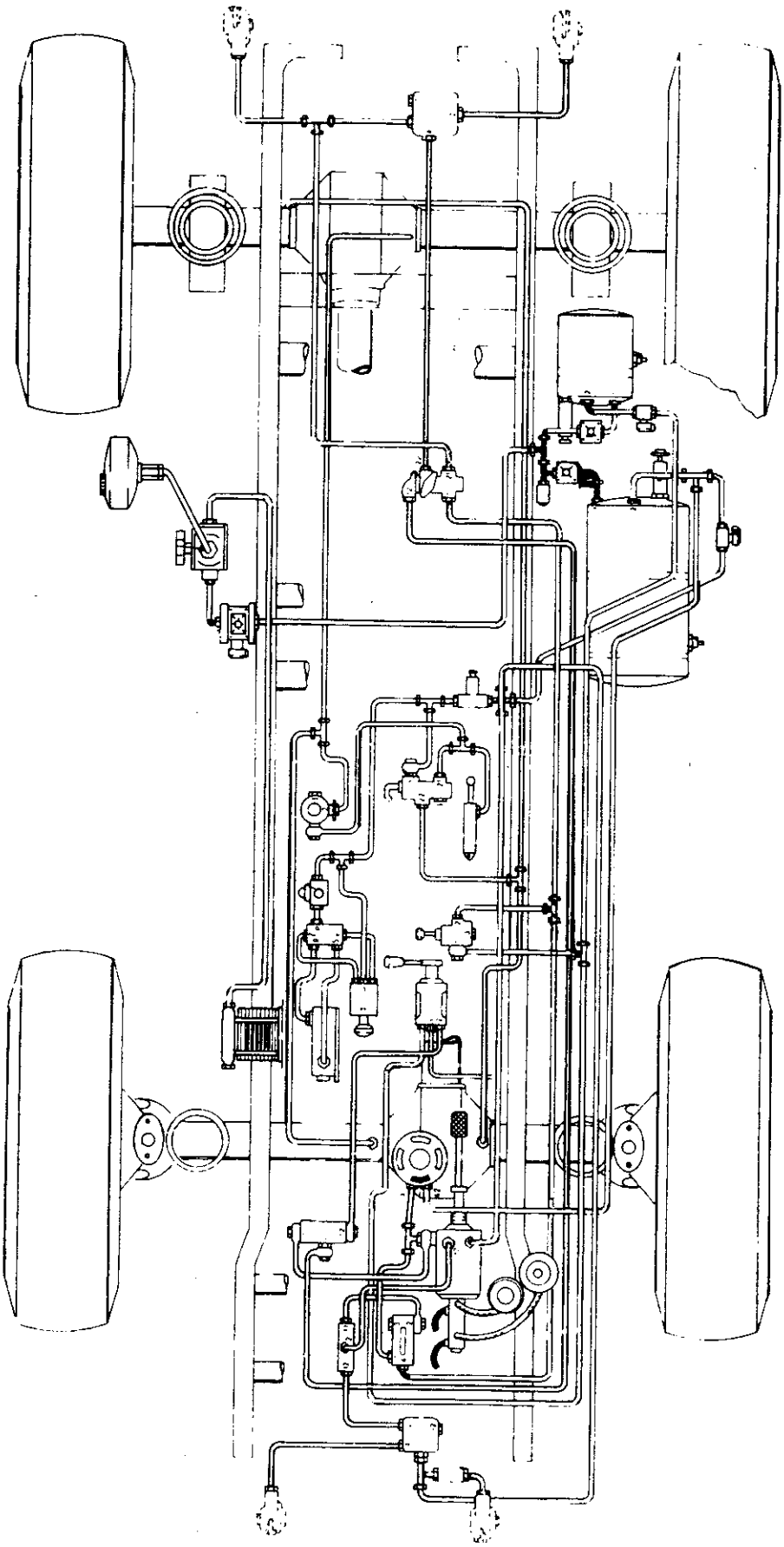

DIAGRAM 6

S.E.E. AIR SYSTEM
INITIAL CHARGE CIRCUIT

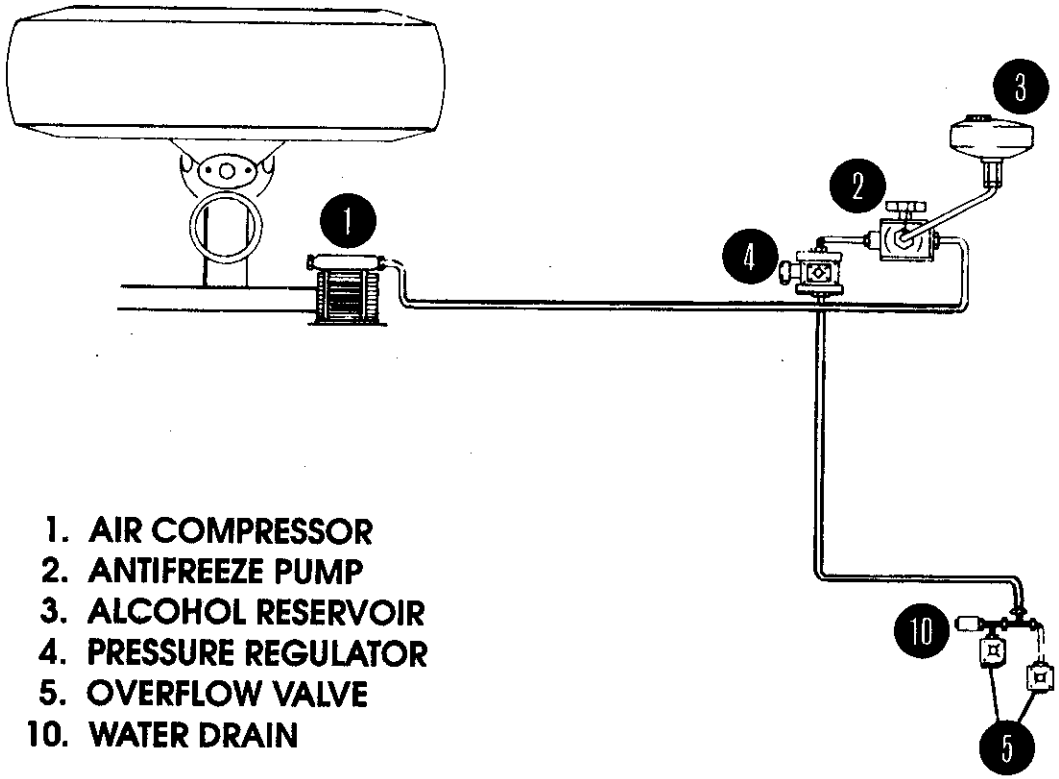

1. AIR COMPRESSOR
2. ANTIFREEZE PUMP
3. ALCOHOL RESERVOIR
4. PRESSURE REGULATOR
5. OVERFLOW VALVE
10. WATER DRAIN

DIAGRAM 7

S.E.E. AIR SYSTEM
PRIMARY SUPPLY/STAGE I BRAKE BOOST

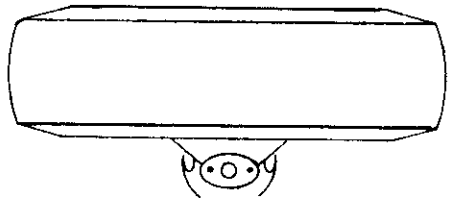

5. OVERFLOW VALVE
7. AIR RESERVOIR; LARGE
8. TEST CONNECTION
9. SAFETY VALVE
10. RESERVOIR DRAIN
11. BRAKE BOOSTER
12. MASTER CYLINDER
13. DUAL AIR PRESSURE GAUGE

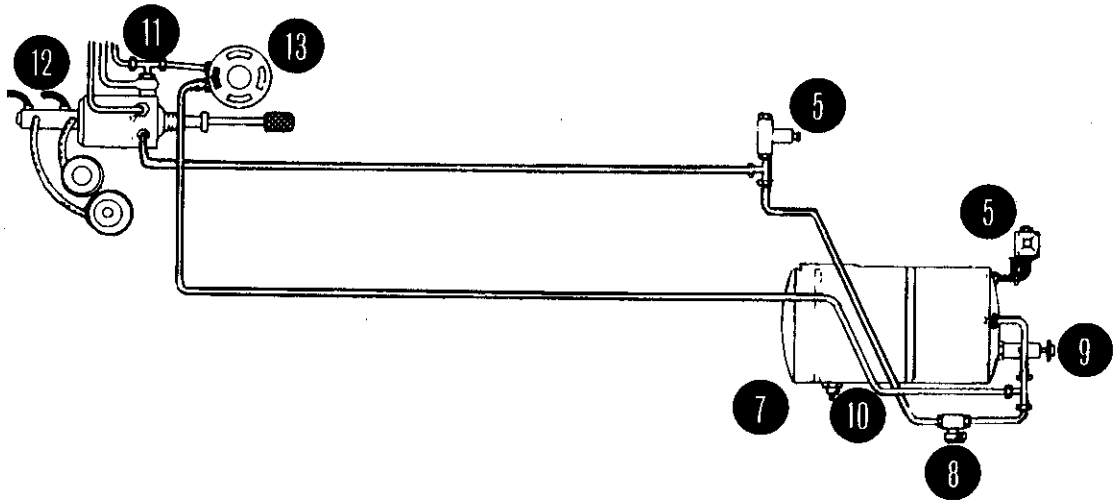

DIAGRAM 8

S.E.E. AIR SYSTEM
SERVICE BRAKE APPLIED/STAGE II BRAKE BOOST

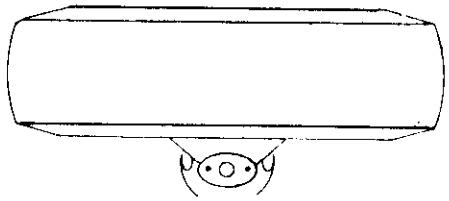

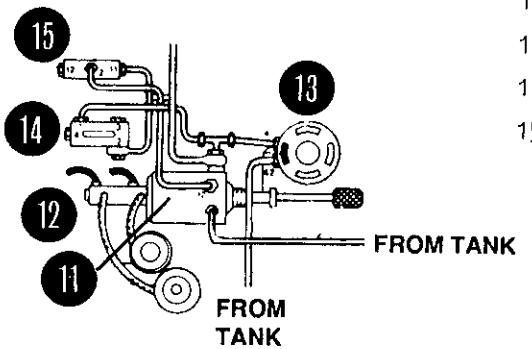

11. BRAKE BOOSTER
12. MASTER CYLINDER
13. DUAL AIR PRESSURE GAUGE
14. 3/2 WAY VALVE
15. SHUTTLE VALVE

DIAGRAM 9

S.E.E. AIR SYSTEM
ACCESSORIES CIRCUITS
(4WD, DIFF. LOCK, INTER. SPEED SHIFT, HIGH IDLE)

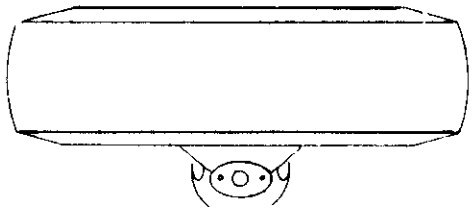

5. OVERFLOW VALVE
7. AIR RESERVOIR, LARGE
8. TEST CONNECTION
10. RESERVOIR DRAIN
23. 4WD, DIFF LOCK CONTROL
24. 4WD SHIFT CYLINDER
25. PRESSURE REDUCING VALVE
27. INTER. SPEED SHIFT COLLAR
28. SOLENOID SWITCH
29. INTER. SPEED CONTROL VALVE
30. INTER. SPEED SHIFT CYLINDER
31. SOLENOID SWITCH
32. HIGH IDLE CYLINDER

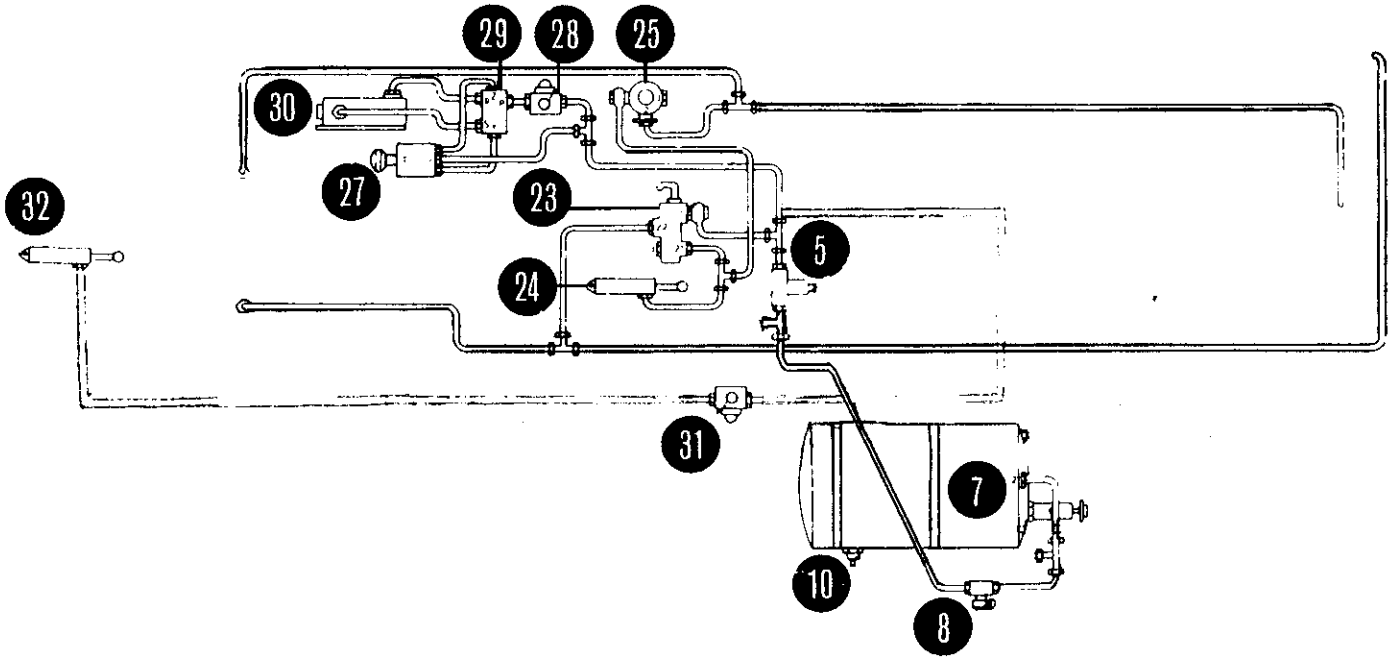

S.E.E. AIR SYSTEM
TRAILER BRAKE/STAGE II CUT-OUT CIRCUIT
(BRAKE PEDAL APPLIED)

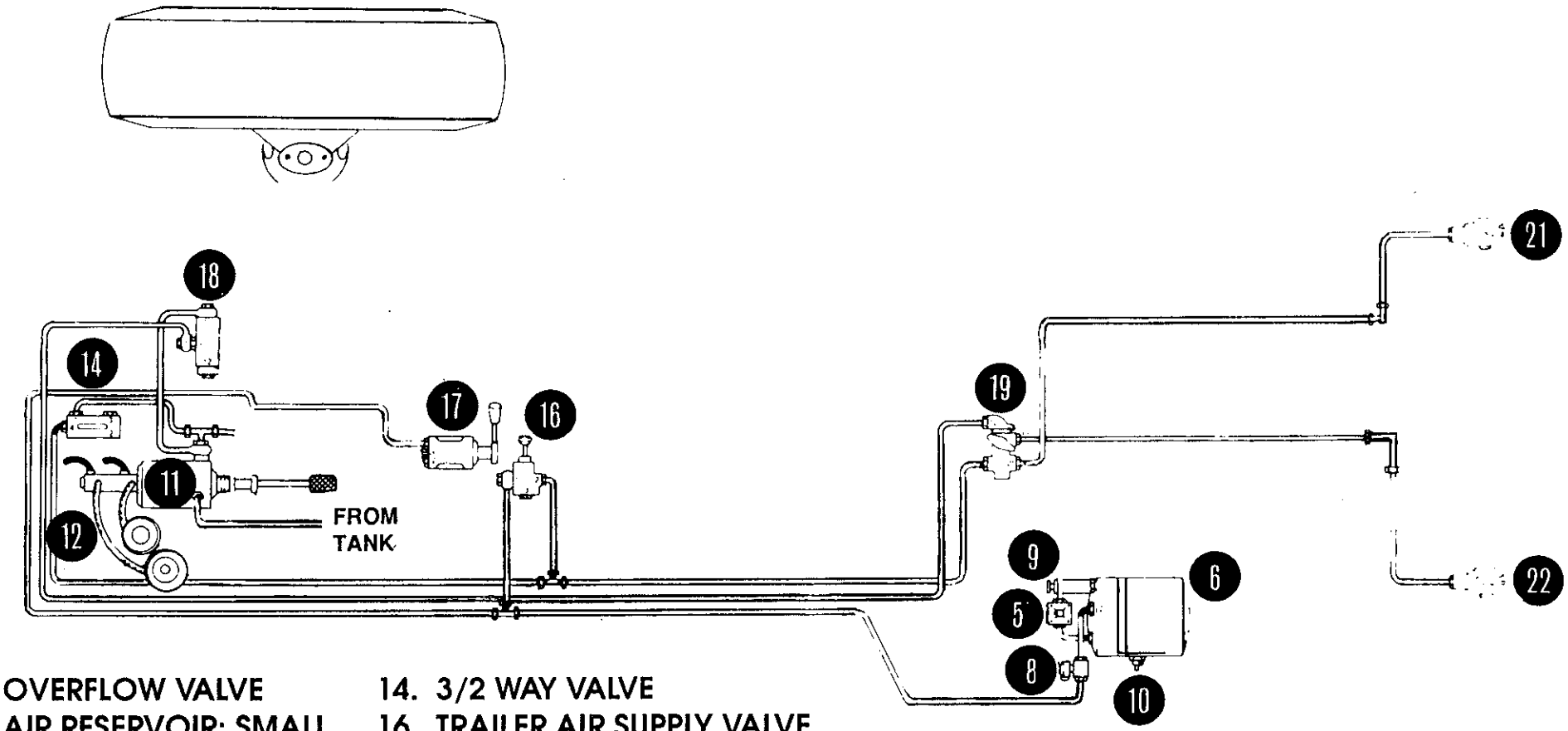

5. OVERFLOW VALVE
6. AIR RESERVOIR; SMALL
8. TEST CONNECTION
9. SAFETY VALVE
10. RESERVOIR DRAIN
11. BRAKE BOOSTER
12. MASTER CYLINDER
14. 3/2 WAY VALVE
16. TRAILER AIR SUPPLY VALVE
17. ANTI-JACKNIFE HANDLE
18. SHUTTLE VALVE
19. TRACTOR PROTECTION VALVE
21. GLAD HAND, BLUE
22. GLAD HAND, RED

S.E.E. AIR SYSTEM
TRAILER BRAKE/STAGE II CUT-OUT CIRCUIT
(TRAILER BRAKE HANDLE APPLIED)

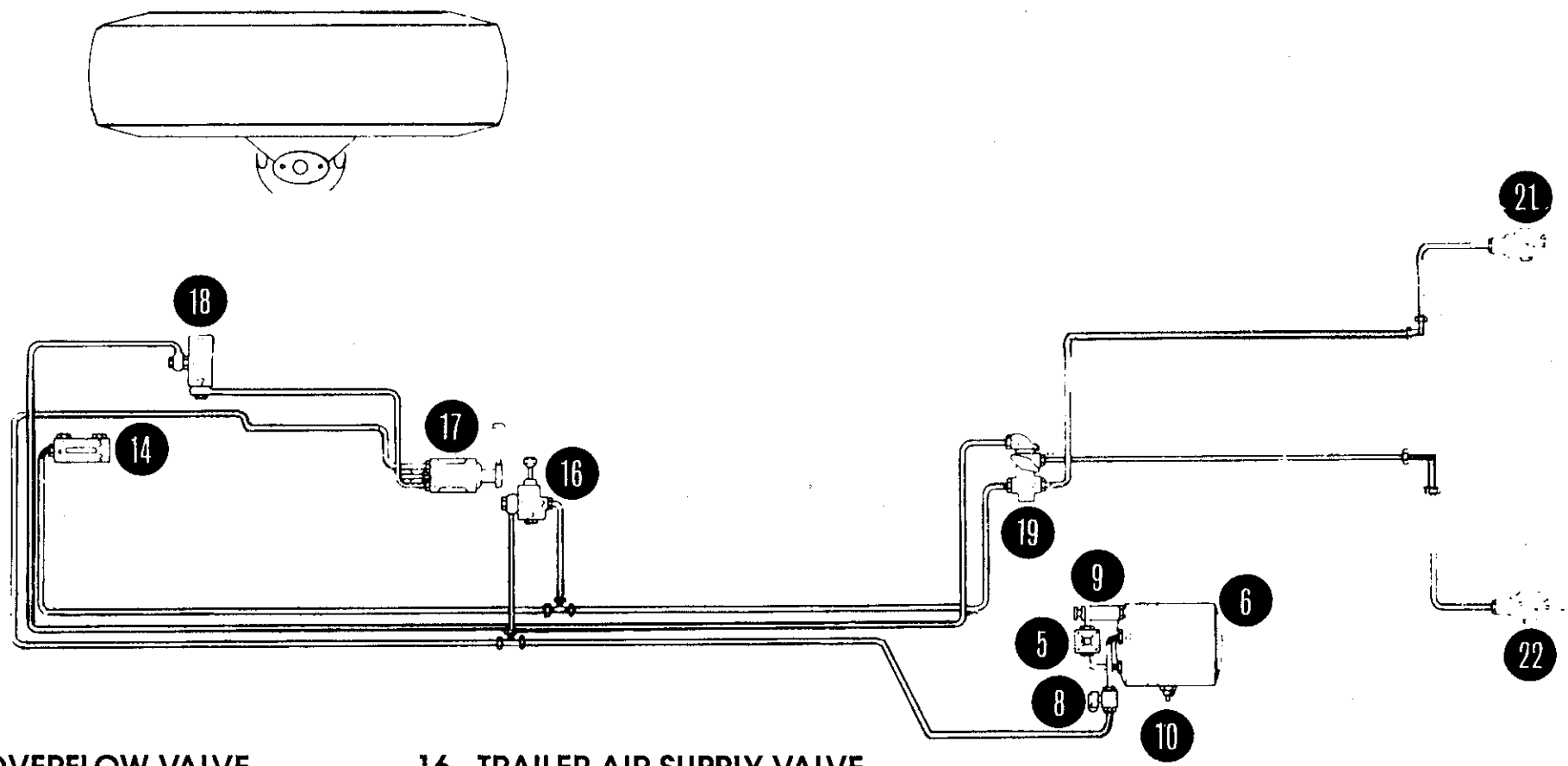

5. OVERFLOW VALVE
6. AIR RESERVOIR, SMALL
8. TEST CONNECTION
9. SAFETY VALVE
10. RESERVOIR DRAIN
14. 3/2 WAY VALVE
16. TRAILER AIR SUPPLY VALVE
17. ANTI-JACKNIFE HANDLE
18. SHUTTLE VALVE
19. TRACTOR PROTECTION VALVE
21. GLAD HAND; BLUE
22. GLAD HAND; RED

S.E.E. AIR SYSTEM
BRAKE CIRCUIT
(WHEN BEING TOWED)

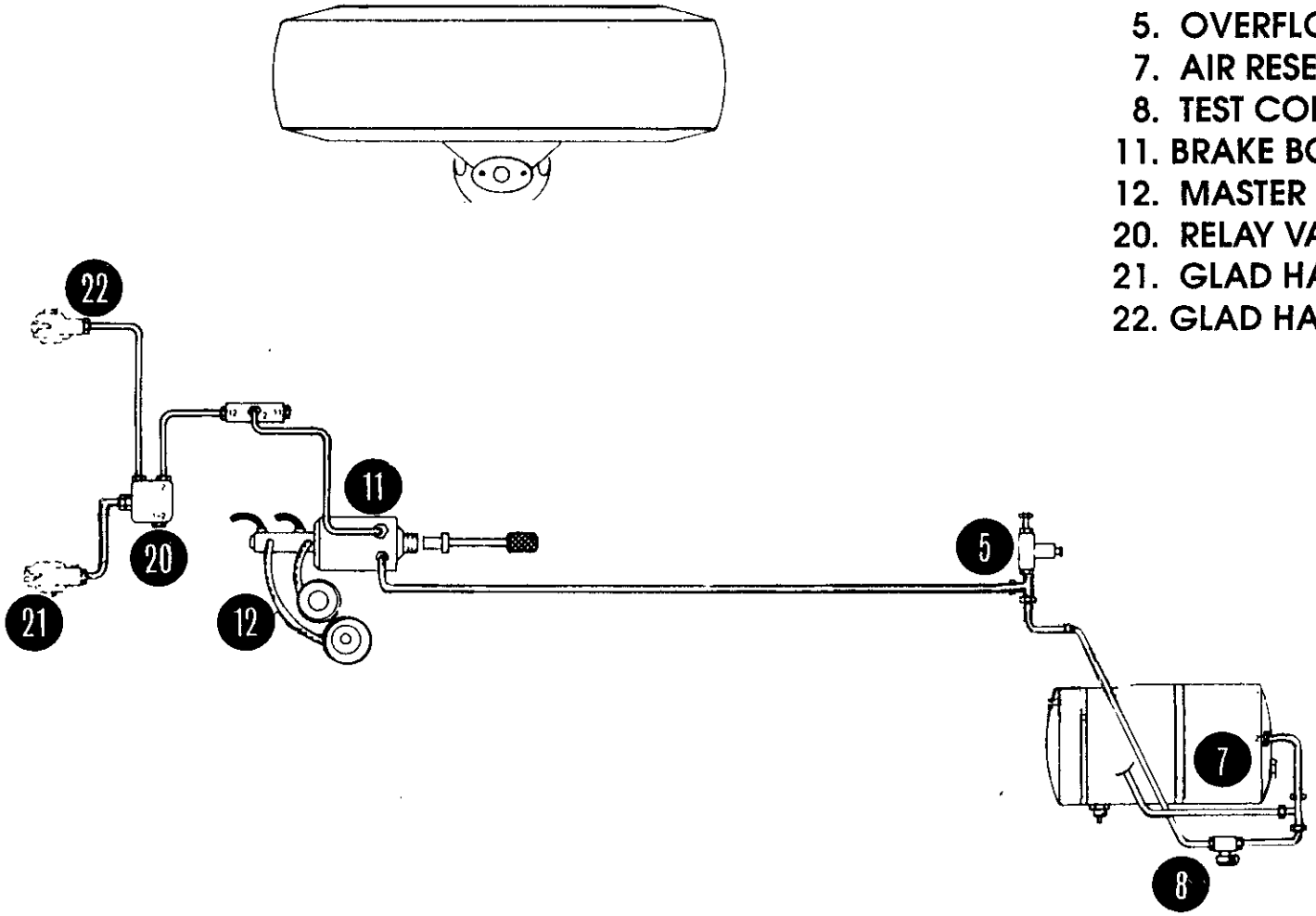

5. OVERFLOW VALVE
7. AIR RESERVOIR, LARGE
8. TEST CONNECTION
11. BRAKE BOOSTER
12. MASTER CYLINDER
20. RELAY VALVE
21. GLAD HAND
22. GLAD HAND

STANDARD GRAPHICAL SYMBOLS

THE SYMBOLS SHOWN CONFORM TO THE AMERICAN NATIONAL STANDARDS INSTITUTE (ANSI) SPECIFICIATIONS. BASIC SYMBOLS CAN BE COMBINED IN ANY COMBINATION. NO ATTEMPT IS MADE TO SHOW ALL COMBINATIONS.

LINES AND LINE FUNCTIONS	
LINE, WORKING	
LINE, PILOT (L>20W)	
LINE, DRAIN (L<5W)	
CONNECTOR	
LINE, FLEXIBLE	
LINE, JOINING	
LINE, PASSING	
DIRECTION OF FLOW, HYDRAULIC PNEUMATIC	
LINE TO RESERVOIR ABOVE FLUID LEVEL BELOW FLUID LEVEL	
LINE TO VENTED MANIFOLD	
PLUG OR PLUGGED CONNECTION	
RESTRICTION FIXED	
RESTRICTION, VARIABLE	

PUMPS	
PUMP, SINGLE FIXED DISPLACEMENT	
PUMP, SINGLE VARIABLE DISPLACEMENT	
MOTORS AND CYLINDERS	
MOTOR, ROTARY, FIXED DISPLACEMENT	
MOTOR, ROTARY VARIABLE DISPLACEMENT	
MOTOR, OSCILLATING	
CYLINDER, SINGLE ACTING	
CYLINDER, DOUBLE ACTING	
CYLINDER, DIFFERENTIAL ROD	
CYLINDER, DOUBLE END ROD	
CYLINDER, CUSHIONS BOTH ENDS	

MISCELLANEOUS UNITS	
DIRECTION OF ROTATION (ARROW IN FRONT OF SHAFT)	
COMPONENT ENCLOSURE	
RESERVOIR, VENTED	
RESERVOIR, PRESSURIZED	
PRESSURE GAGE	
TEMPERATURE GAGE	
FLOW METER (FLOW RATE)	
ELECTRIC MOTOR	M
ACCUMULATOR, SPRING LOADED	
ACCUMULATOR, GAS CHARGED	
FILTER OR STRAINER	
HEATER	
COOLER	
TEMPERATURE CONTROLLER	
INTENSIFIER	
PRESSURE SWITCH	
BASIC VALVE SYMBOLS	
CHECK VALVE	
MANUAL SHUT OFF VALVE	
BASIC VALVE ENVELOPE	
VALVE, SINGLE FLOW PATH, NORMALLY CLOSED	

BASIC VALVE SYMBOLS (CONT.)	
VALVE, SINGLE FLOW PATH, NORMALLY OPEN	
VALVE, MAXIMUM PRESSURE (RELIEF)	
BASIC VALVE SYMBOL, MULTIPLE FLOW PATHS	
FLOW PATHS BLOCKED IN CENTER POSITION	
MULTIPLE FLOW PATHS (ARROW SHOWS FLOW DIRECTION)	
VALVE EXAMPLES	
UNLOADING VALVE, INTERNAL DRAIN, REMOTELY OPERATED	
DECELERATION VALVE, NORMALLY OPEN	
SEQUENCE VALVE, DIRECTLY OPERATED, EXTERNALLY DRAINED	
PRESSURE REDUCING VALVE	
COUNTER BALANCE VALVE WITH INTEGRAL CHECK	
TEMPERATURE AND PRESSURE COMPENSATED FLOW CONTROL WITH INTEGRAL CHECK	
DIRECTIONAL VALVE, TWO POSITION, THREE CONNECTION	
DIRECTIONAL VALVE, THREE POSITION, FOUR CONNECTION	
VALVE, INFINITE POSITIONING (INDICATED BY HORIZONTAL BARS)	

METHODS OF OPERATION	
PRESSURE COMPENSATOR	
DETENT	
MANUAL	
MECHANICAL	
PEDAL OR TREADLE	
PUSH BUTTON	

METHODS OF OPERATION	
LEVER	
PILOT PRESSURE	
SOLENOID	
SOLENOID CONTROLLED, PILOT PRESSURE OPERATED	
SPRING	
SERVO	

FRONT HYDRAULIC SYSTEM, S.E.E.
TRACTOR WHEEL 4X4 DED

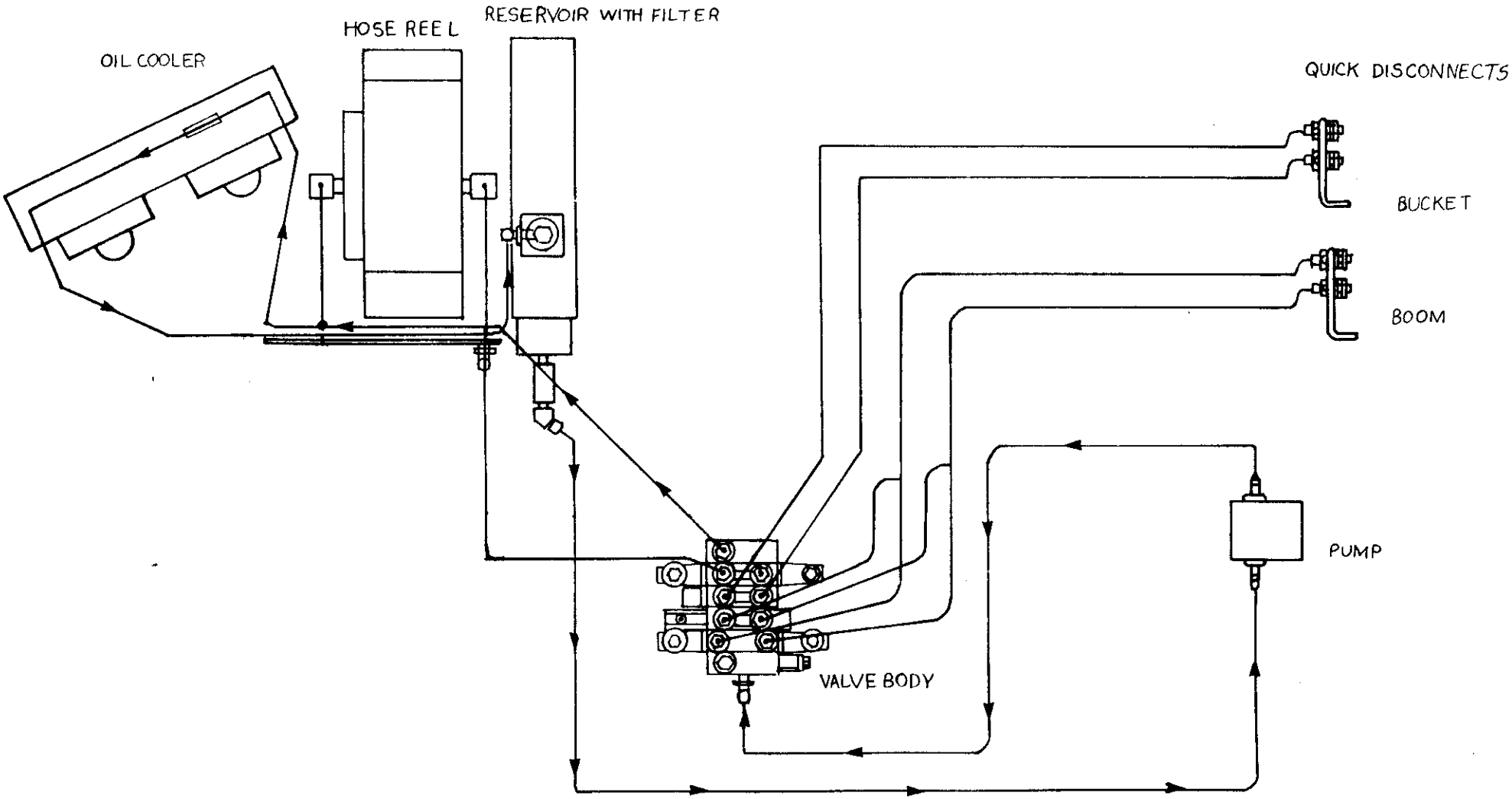

HYDRAULIC DIAGRAM FOR THE FRONT LOADER TYPER FL 4

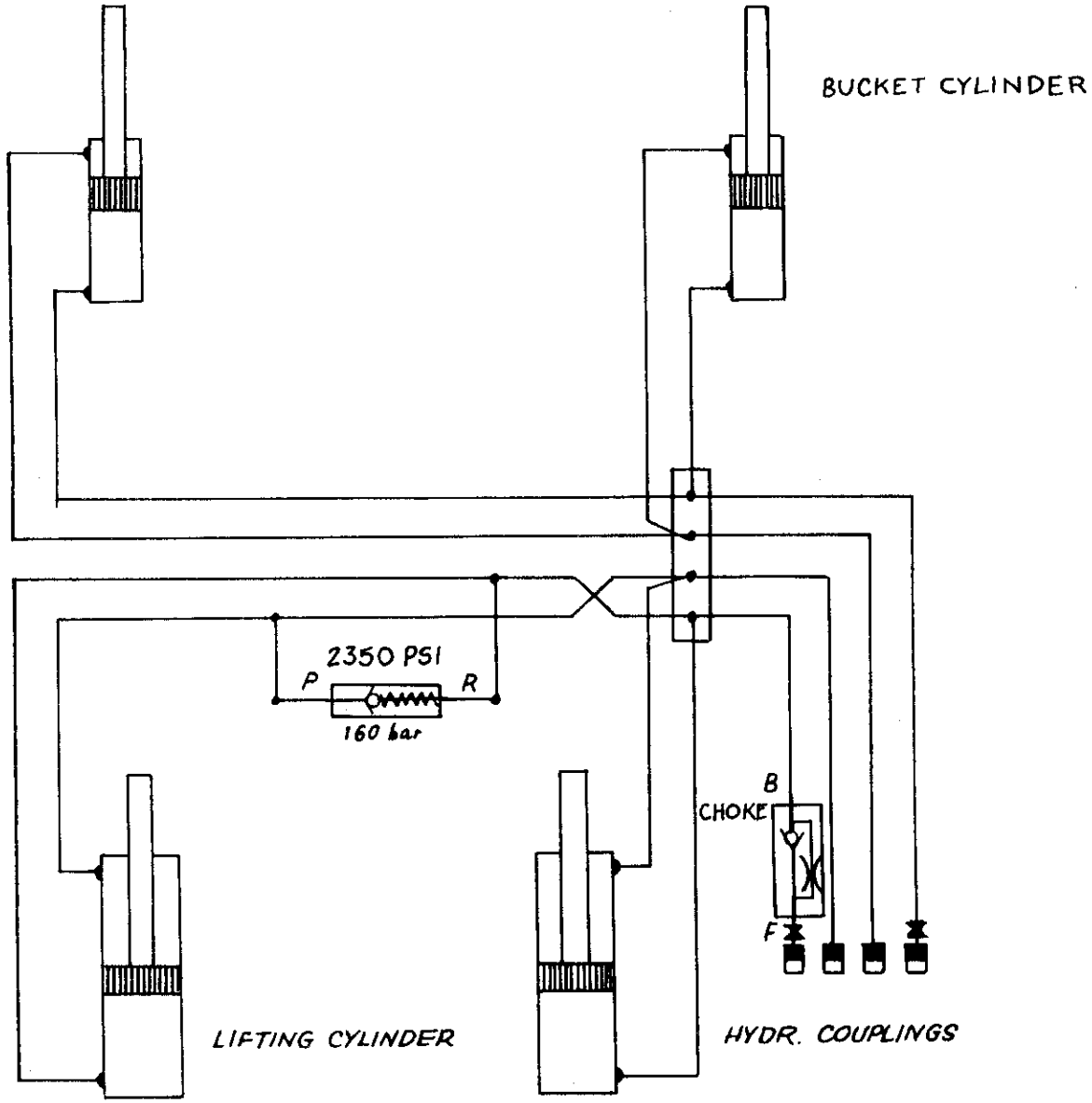

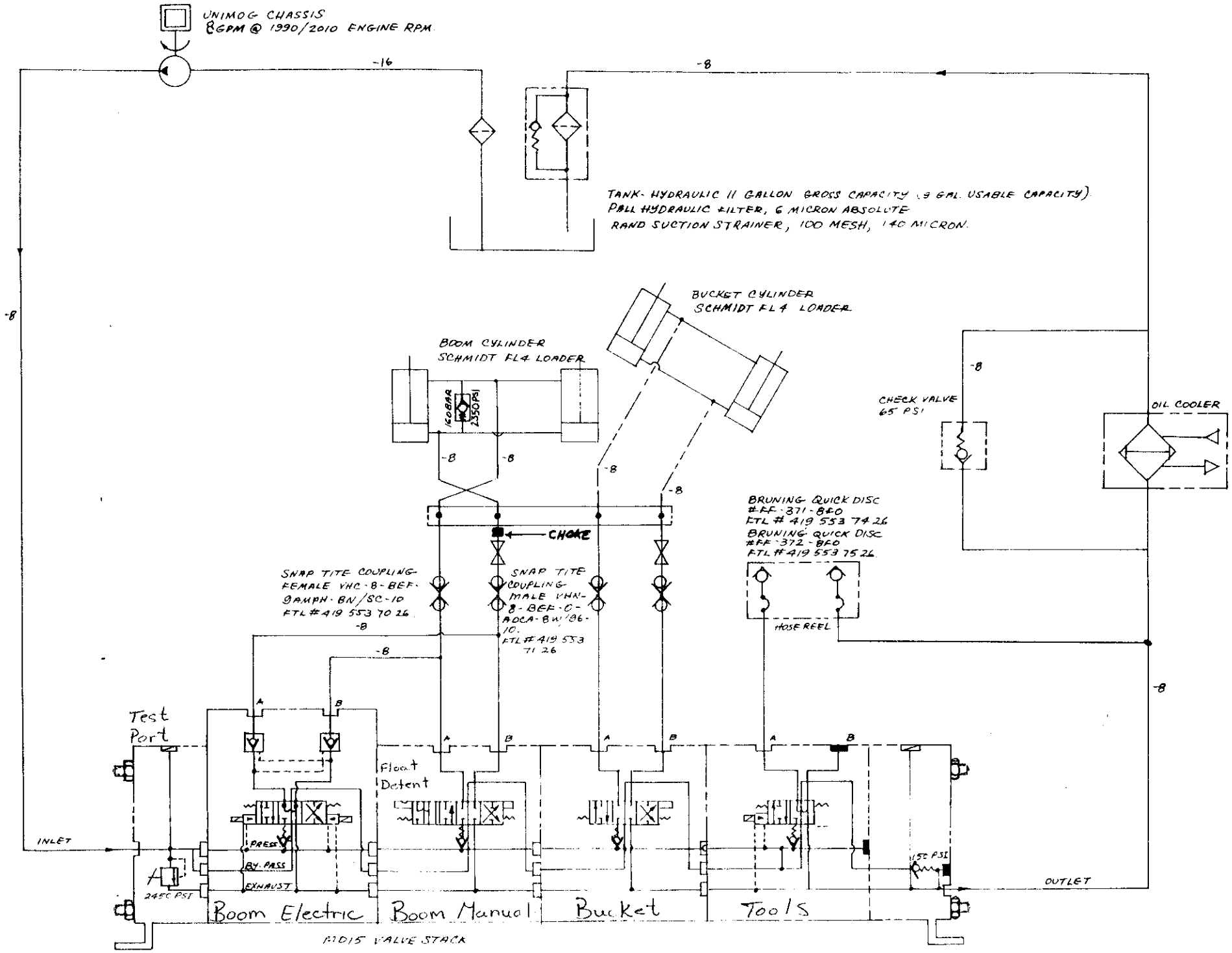
UNIMOG CHASSIS
8GPM @ 1990/2010 ENGINE RPM
-16
-8
TANK- HYDRAULIC 11 GALLON GROSS CAPACITY (9 GAL. USABLE CAPACITY).
PALL HYDRAULIC FILTER, 6 MICRON ABSOLUTE
RAND SUCTION STRAINER, 100 MESH, 140 MICRON.
BUCKET CYLINDER
SCHMIDT FL4 LOADER
BOOM CYLINDER
SCHMIDT FL4 LOADER
160BAR
2350PSI
CHECK VALVE
65 PSI
OIL COOLER
CHOKE
BRUNING QUICK DISC
#FF-371-8FO
FTL # 419 553 74 26
BRUNING QUICK DISC
#FF-372-8FO
FTL # 419 553 75 26
SNAP TITE COUPLING-
FEMALE VNC-8-BEF-
9AMPH-BN/SC-10
FTL # 419 553 70 26
SNAP TITE
COUPLING
MALE VNN-
8-BEF-O-
AOCA-BN/86-
10.
FTL # 419 553
71 26
HOSE REEL
Test
Port
Float
Detent
INLET
PRESS
BY-PASS
EXHAUST
245C PSI
150 PSI
OUTLET
Boom Electric
Boom Manual
Bucket
Tools
MD15 VALVE STACK

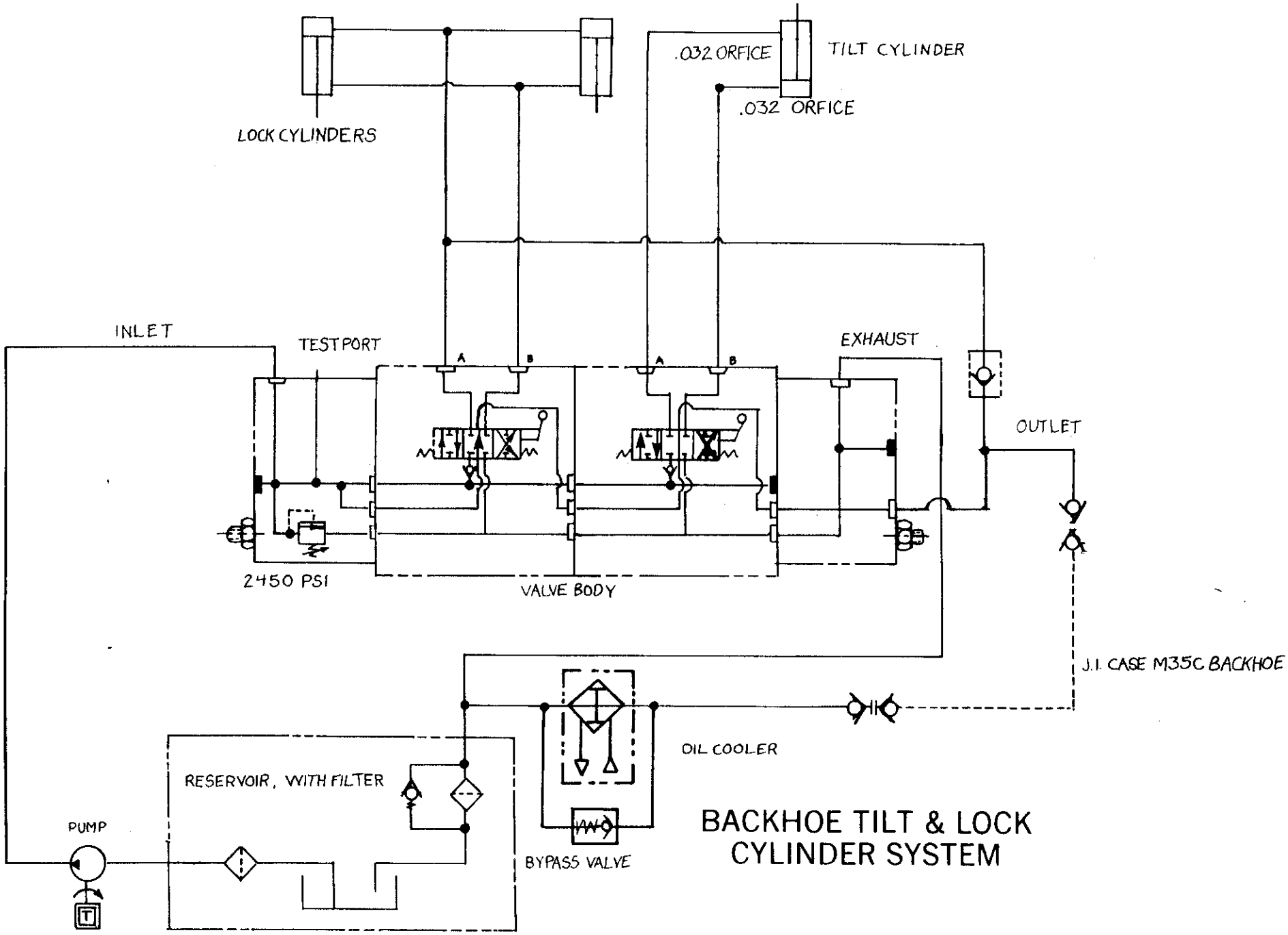

BACKHOE TILT & LOCK CYLINDER SYSTEM

BACKHOE AND STABILIZER SYSTEMS

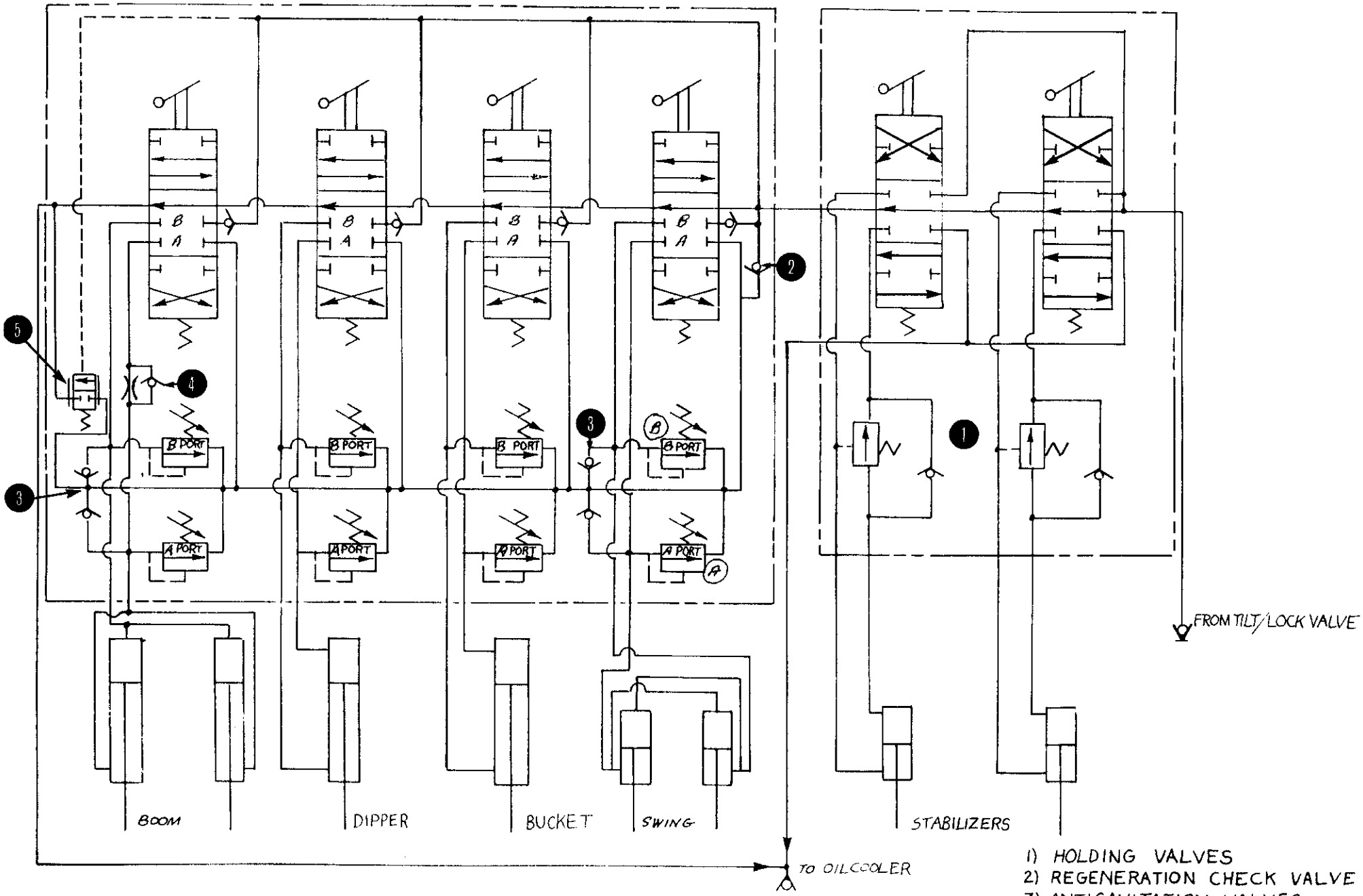

1) HOLDING VALVES
2) REGENERATION CHECK VALVE
3) ANTICAVITATION VALVES
4) FLOW CONTROL VALVE
5) REGENERATION SPOOL (350 PSI)

M35C CASE

BACKHOE CIRCUIT RELIEF PRESSURE

BOOM	- A PORT (UP)	925-1075 PSI
	B PORT (DOWN)	2450-2650 PSI
DIPPER	- A PORT	2450-2650 PSI
	B PORT	2450-2650 PSI
BUCKET	- A PORT	2450-2650 PSI
	B PORT	2450-2650 PSI
SWING	- A PORT	1700-1900 PSI
	B PORT	1700-1900 PSI

EQUIPMENT DIFFERENCES

SEE Tractor	HMMH Tractor
Front Loader	Suspension lockout system
Backhoe	Forklift
Chain saw	Crane
Pavement breaker	Impact wrench
Hammer drill	

EQUIPMENT DATA

Engine	
Manufacturer	Daimler-Benz
Model	353.999
Type	4-stroke diesel, 6 cylinder
Horsepower	110 (81 kW)
Clutch	
Type	Single dry plate
Engine Air Cleaner	
Manufacturer	Donaldson
Model	FSGO9-0160
Type	Dry
Fuel System	
Fuel Pump	
Manufacturer	Bosch
Timing @ 700 rpm +50	Low idle
Injection Order	1-5-3-6-2-4
Fuel Tank	
Capacity	30 gallons (114 l)
Cooling System	
Capacity	6 gallons (23 l)
Electrical System	
Batteries	
Number	2
Type	Lead-acid
Voltage	12 vdc
Connected	Series
Output	24 vdc
Post to Ground	Negative
Alternator	
Manufacturer	Bosch
Rating	55 amps
Drive	Belt, by engine
Starter	
Manufacturer	Bosch
Transmission	
Type	Fully synchronized
Speeds	16 forward, 8 reverse
Power Take-Off	Engine driven

B-1

EQUIPMENT DATA (CONT)

Axles	
Type	Portal with reduction thrust tubes
Drive	4-wheel
Suspension	
Springs	Coil
Shock Absorbers	Telescopic
Front Lockout	Hydraulic actuated (HMMH)
Brakes	
Service	
Type	4-wheel, dual-circuit disc/caliper
Power Actuated	Hydraulic, air assist
Warning System	Low-air pressure (audible and visual)
Parking	
Type	Caliper, mechanical cable, rear wheels
Air Compressor	
Type	Engine driven
Cylinders	1
Bore	3.03 inches (77 mm)
Stroke	1.18 inches (30 mm)
Capacity @ 2600 rpm	4.77 cfm (135 lpm) @ 105 psi (724 kPa)
Wheels	
Type	Interchangeable rim and wheel
Tires	5 multipurpose
Size	12.5 R20 12 PR radial
Pressure	Low
Track Width	64 inches (163 cm)
Steering	
Type	Recirculating ball with power assist
Power Steering Pump	Belt, by engine
Hydraulic System	
Front (SEE)	
Drive	Engine
Capacity	8 gpm @ 2450 psi (30 lpm @ 167 bar) @ 2000 engine rpm
Use	Front loader and machine tools
Rear (SEE)	
Drive	PTO
Capacity	26 gpm @ 2450 psi (98 lpm @ 167 bar) @ 2000 engine rpm
Use	Backhoe
Front (HMMH)	
Drive	Engine
Capacity	8 gpm @ 2450 psi (30 lpm @ 167 bar) @ 2000 engine rpm
Use	Forklift and impact wrench
Rear (HMMH)	
Drive	PTO
Capacity	14 gpm @ 2450 psi (54 lpm at 167 bar) @ 1100 engine rpm
Use	Crane

B-2

VALVE ADJUSTMENT

This task covers: Adjustment

INITIAL SETUP

Tools and Special Equipment:

Tool Kit, SC 5180-90-CL-N26

Equipment Condition:

Reference	Condition Description
Page 4-3	Valve Cover Removed

ADJUSTMENT

1. Rotate crankshaft to right until rocker arms of No. 6 cylinder overlap. No. 1 cylinder will now be at Top Dead Center (TDC).

CAUTION
Do not make valve adjustments until engine has cooled to below 122°F (50°C) to prevent damage to equipment.

2. Using feeler gage, check valve clearance. Clearance for intake valves 2, 3, and 7 is 0.008 in. (0.20 mm). Clearance for exhaust valves 1, 5, and 9 is 0.012 in. (0.30 mm).

3. If adjustment is required, loosen nut (1) and insert feeler gage between rocker arm (2) and pad (3). Turn adjusting screw (4) until rocker arm just touches feeler gage. Tighten nut (1) and recheck clearance.

4. Rotate crankshaft to right until rocker arms of No. 1 cylinder overlap. No. 6 cylinder will now be at TDC.

5. Repeat steps 2 and 3 for intake valves 6, 10, and 11 and exhaust valves 4, 8, and 12.

NOTE

Follow-on Maintenance:
Install valve cover (page 4-3).

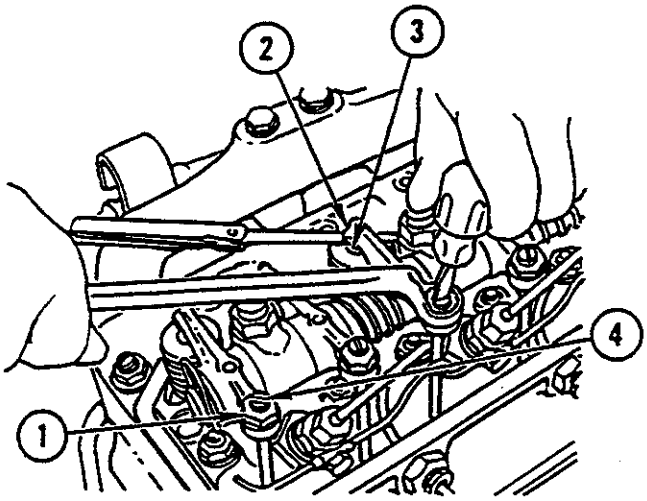

NO. 1 CYLINDER AT COMPRESSION TDC

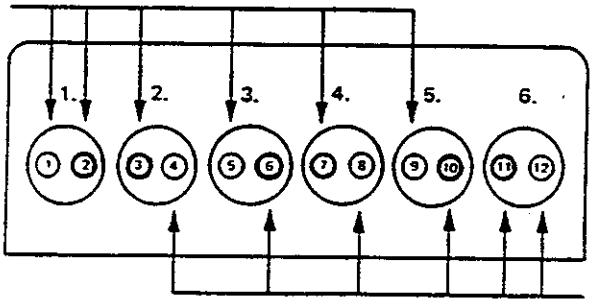

NO. 6 CYLINDER AT COMPRESSION TDC

B-3

BRAKE SYSTEM BLEEDING

This task covers: Bleeding

INITIAL SETUP

Tools and Special Equipment:

Shop Equipment, SC 4910-95-CL-A74
Tool Kit, SC 5180-90-CL-N26
Elbow (2), P/N 000 589 03 25 00
Hose, P/N 000 589 02 25 00

Materials/Parts:

Fluid, Silicone Brake	Appendix C, Item 15
Rags	Appendix C, Item 32

Personnel Required: (2)

References:

LO 5-2420-224-12

Equipment Condition:

Reference	Condition Description
Page 4-388	Outside Engine Hood Removed

General Safety Instructions:

WARNING
Fuel and oil are slippery and can cause falls. To avoid injury, wipe up spilled fuel or oil with rags.

BLEEDING

CAUTION
Bleeding brake system by pumping brake pedal is not sufficient. Compressed air must be used to bleed brake system to prevent damage to equipment.

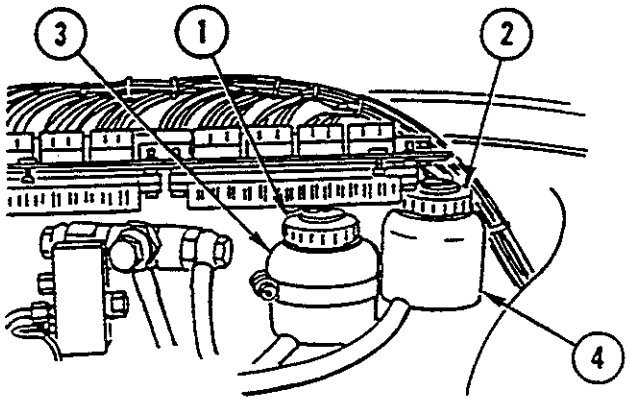

1. Remove two brake fluid reservoir caps (1 and 2) from two brake fluid reservoirs (3 and 4).

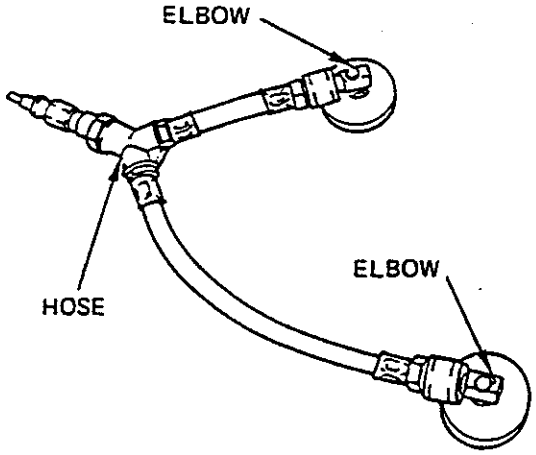

2. Install two elbows on hose.

B-4

BRAKE SYSTEM BLEEDING (CONT)

3. Install adapter assembly (5) to two brake fluid reservoirs (3 and 4).

> **CAUTION**
> Air supply must be regulated to 14.5-29.0 psi (1-2 bar) to prevent damage to equipment.

4. Connect adapter assembly (5) to air supply hose (6).

> **CAUTION**
> Brake fluid is to be considered contaminated and is not to be reused to prevent damage to equipment.

NOTE

- Use suitable container to catch brake fluid.
- Open only one bleeder valve at a time.
- Observe fluid level in brake fluid reservoirs and do not allow brake fluid to go below MIN indication before adding more fluid to reservoir.
- Brake system is considered properly bled when steady stream of brake fluid comes out of bleeder valve with no air bubbles in the stream.

5. Bleed brake system in following order:

   a. Master cylinder (7) 2 places
   b. Right rear caliper (8)
   c. Left rear caliper (9)
   d. Right rear front caliper (10)
   e. Left rear front caliper (11)
   f. ALB modulator (12)
   g. Right front caliper (13)
   h. Left front caliper (14)
   i. Clutch slave cylinder (15)

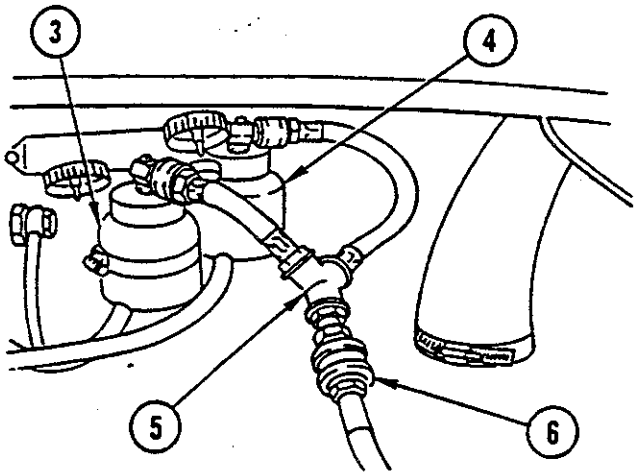

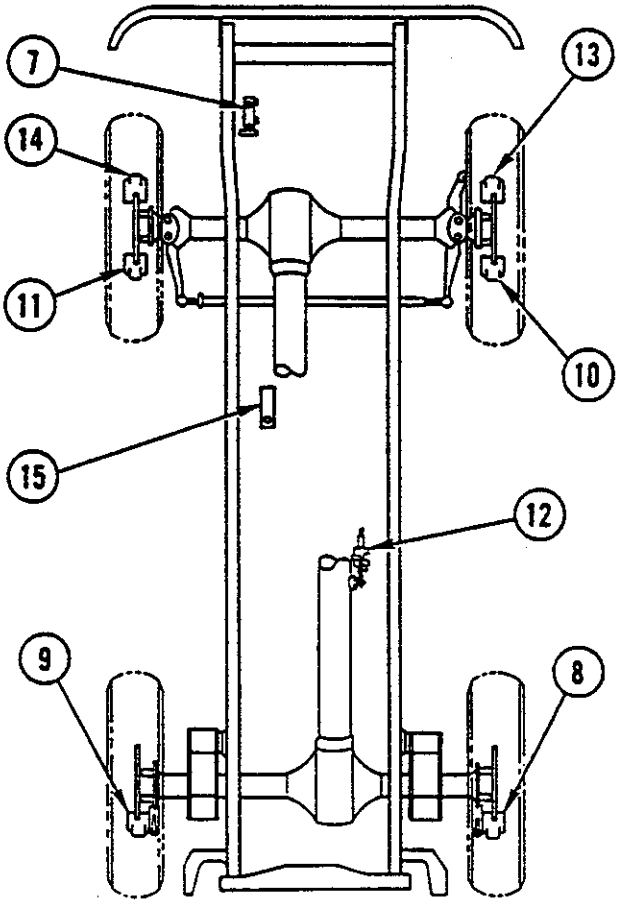

B-5

BRAKE SYSTEM BLEEDING (CONT)

6. Disconnect air supply hose (6) from adapter assembly (5).
7. Remove adapter assembly (5) from two brake fluid reservoirs (3 and 4).

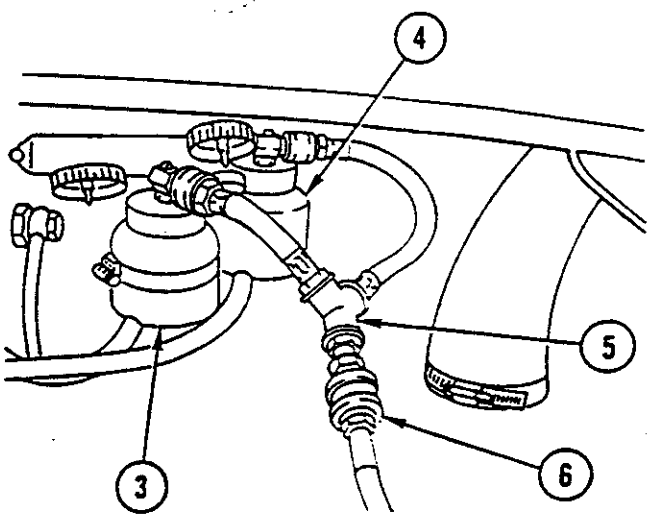

8. Remove two elbows from hose.
9. Fill two brake fluid reservoirs (3 and 4) to MAX level with brake fluid.

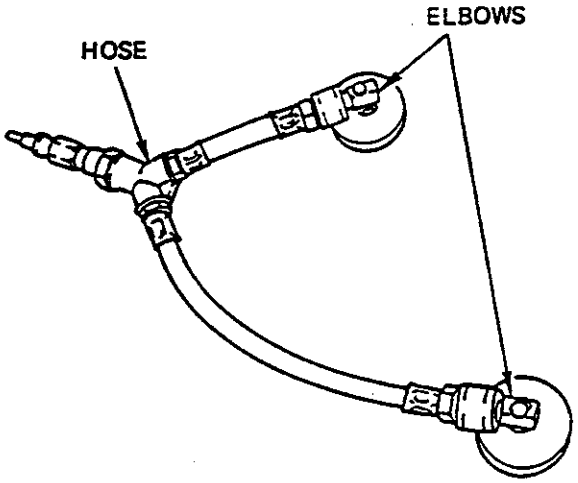

10. Install two brake fluid reservoir caps (1 and 2) on two brake fluid reservoirs (3 and 4).

NOTE

Follow-on Maintenance:
Fill clutch hydraulic reservoir (LO 5-2420-224-12.
Fill brake fluid reservoir (LO 5-2420-224-12).
Install outside engine hood (page 4-388).

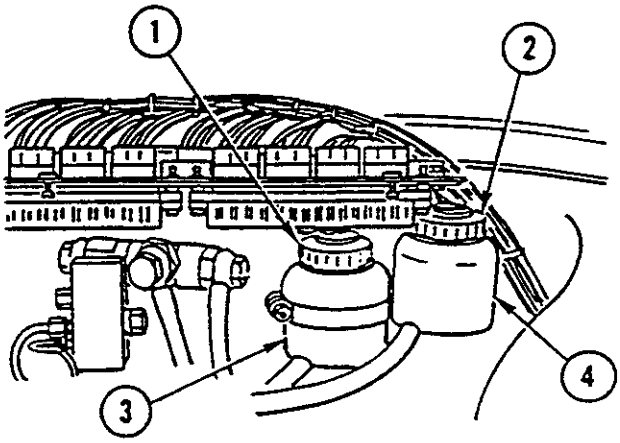

B-6